DVD-Video Player

DVDQ40-50

DVDQ40 /001/021/051
DVDQ50 /001/021/051

Service
Service
Service

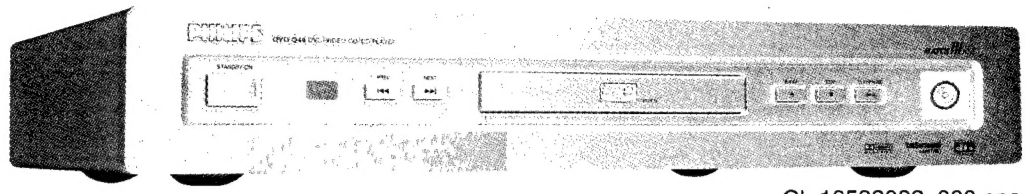

CL 16532082_000.eps
270601

Service Manual

CLASS 1
LASER PRODUCT

DVD VIDEO

COMPACT disc DIGITAL VIDEO

COMPACT disc DIGITAL AUDIO

Contents **Page**

1	Technical Specifications And Connection Facilities		2	
2	Warnings, Laser Safety Instructions And Notes		3	
3	Directions For Use		6	
4	Mechanical Instructions And Exploded Views		16	
5	Diagnostic Software Descriptions And Troubleshooting		21	
6	*Block and Wiring Diagram*			
	Block Diagram		33	
	Wiring Diagram		34	
7	*Electrical Diagrams And Print-Layouts*		*Diagram*	*PWB*
	Power Supply Unit STEP 2001		35	36-37
	A/V Board Video	(Diagram A1)	38	41-54
	A/V Board Audio 1	(Diagram A2)	39	41-44
	A/V Board Audio 2	(Diagram A3)	40	41-44
	Control Panel	(Diagram C)	45	46-47
	Display Panel	(Diagram D)	48	49-50
	DTS Panel: Video	(Diagram D1)	51	54-55
	DTS Panel: DAIO	(Diagram D2)	52	54-55
	DTS Panel: Decoder	(Diagram D3)	53	54-55
	High Quality YUV	(Diagram P2)	56	57-58
	Single SCART	(Diagram SS)	59	60-61
8	Electrical Alignments		63	
9	Circuit Descriptions And List Of Abbreviations		63 69	
10	Spare Part List		71	

© Copyright 2001 Philips Consumer Electronics B.V. Eindhoven, The Netherlands.
All rights reserved. No part of this publication may be reproduced, stored in a retrieval system or transmitted, in any form or by any means, electronic, mechanical, photocopying, or otherwise without the prior permission of Philips.

Published by MW 0167 Service PaCE Printed in the Netherlands Subject to modification GB 3122 785 11590

PHILIPS

PHILIPS

1. Technical Specifications

Specifications

English

PLAYBACK SYSTEM

DVD Video
Video CD & SVCD
CD (CD-Recordable and CD-Rewritable)
DVD+RW
MP3

OPTICAL READOUT SYSTEM

Lasertype	Semiconductor AlGaAs
Numerical Aperture	0.60 (DVD)
	0.45 (VCD/CD)
Wavelength	650 nm (DVD)
	780 nm (VCD/CD)

DVD DISC FORMAT

Medium	Optical Disc	
Diameter	12cm (8cm)	
Playing time	One layer	2.15 h*
(12cm)	Dual layer	4 h*
	Two side	4.30 h*
	Single layer	
	Two side	8 h*
	Dual layer	

VIDEO FORMAT

DA Converter	10 bits (S-Video & CVBS)
	10 bits, 54 MHz
	(Pr/Cr Pb/Cb Y Component Video Out)
Signal handling	Components
Digital Compression	MPEG2 for DVD.
	MPEG1 for VCD

TV STANDARD	(PAL/50Hz)	(NTSC/60Hz)
Number of lines	625	525
Playback	Multistandard	(PAL/NTSC)

DVD

Horizontal Resolution	720 pixels	720 pixels
Vertical Resolution	576 lines	480 lines

VCD

Horizontal Resolution	352 pixels	352 pixels
Vertical Resolution	288 lines	240 lines

VIDEO PERFORMANCE

Video output	1 Vpp into 75 ohm
S-Video output	Y: 1 Vpp into 75 ohm
	C: 0.3 Vpp into 75 ohm
Component video output	Y: 1 Vpp into 75 ohm
	Pb/Cb Pr/Cr: 0.7 Vpp into 75 ohm
RGB (SCART) output	0.7 Vpp into 75 ohm
Black Level Shift	On/Off
Video Shift	Left/Right

AUDIO FORMAT

Digital	MPEG	Compressed Digital
	DTS/Dolby Digital	
	PCM	16, 20, 24 bits
		fs, 44.1, 48, 96 kHz
MPEG MP3		MPEG Audio L3

Analog Sound Stereo
Dolby Pro Logic downmix from Dolby Digital multi-channel sound
Full decoding of Dolby Digital and DTS multi-channel surround sound
3D Sound (TruSurround) for virtual 5.1 channel sound on 2 speakers

AUDIO PERFORMANCE

DA Converter	24 bits	
DVD	fs 96 kHz	4 Hz - 44 kHz
	fs 48 kHz	4 Hz - 22 kHz
Video CD	fs 44.1 kHz	4 Hz - 20 kHz
CD	fs 44.1 kHz	4 Hz - 20 kHz
Signal-Noise (1kHz)		110 dB
Dynamic Range (1kHz)		100 dB
Crosstalk (1kHz)		110 dB
Distortion and Noise (1kHz)		98 dB

CONNECTIONS

SCART	Euroconnector
Y Output	Cinch (green)
Pb/Cb Output	Cinch (blue)
Pr/Cr Output	Cinch (red)
S-Video Output	Mini DIN, 4 pins
Video Output	Cinch (yellow)
Audio L+R output	Cinch (white/red)
6 Channel Analog Output	
Audio Front Left/Right	Cinch (white/red)
Audio Surround Left/Right	Cinch (white/red)
Audio Centre	Cinch (blue)
Audio Subwoofer	Cinch (black)
Digital Output	1 coaxial, 1 optical
	IEC958 for CDDA / LPCM
	IEC1937 for MPEG1/2, Dolby Digital and DTS

CABINET

Dimensions (w x h x d)	435 x 72.5 x 291 mm
Weight	Approximately 3 Kg

GENERAL FUNCTIONALITY

Stop / Play / Pause
Fast Forward / Backward
Time Search
Step Forward / Backward
Slow Motion
Title / Chapter / Track Select
Skip Next / Previous
Repeat (Chapter / Title / All) or (Track / All)
A-B Repeat
Shuffle
Scan
New enhanced user graphical interface
Perfect Still with digital multi-tap filter
Zoom (xl.33, x2, x4) with picture enhancement
Smart Picture for convenient personal Colour setting
Digital Crystal Clear
NTSC/PAL Conversion
Screen Saver (Dim 75% after 15 minutes)
5.1 channels user defines speaker settings
3D Sound (TruSurround)
Virtual Jog Shuttle
Audio and video bit rate indicator
Display Dim
Beeper
Wake up Timer
PCM Output

DVD FUNCTIONALITY

Multi-angle Selection
Audio Selection (one out of maximum eight languages)
Subtitles Selection (one out of maximum 32 languages)
Aspect Ratio conversion (16:9, 4:3 Letterbox, 4:3 Pan Scan)
Parental Control and Child Lock
Disc Menu support (Title Menu and Access Control)
Resume (5 discs) after stop / standby
Programming Titles/chapters with Favorite Track Selection

VIDEO CD FUNCTIONALITY

Playback Control for VCD 2.0 discs
Child Lock
Resume (5 discs) after stop / standby
Programming Tracks with Favorite Track Selection

AUDIO CD FUNCTIONALITY

Time Display (Total / Track / Remaining Track Time)
Full audio functionality with remote control
Programming with Favorite Track Selection

MP3 FUNCTIONALITY

Time Display (Track)
Album and Track Selection
Repeat (Disc / Album / Track)

* *typical playing time for movie with 2 spoken languages and 3 subtitle languages*

Specifications subject to change without prior notice

CL 16532082_002.pdf
290601

2. Warnings And Laser Safety Instructions

(GB) **WARNING**

All ICs and many other semi-conductors are susceptible to electrostatic discharges (ESD).
Careless handling during repair can reduce life drastically.
When repairing, make sure that you are connected with the same potential as the mass of the set via a wrist wrap with resistance.
Keep components and tools also at this potential.

ESD

(NL) **WAARSCHUWING**

Alle IC's en vele andere halfgeleiders zijn gevoelig voor elektrostatische ontladingen (ESD).
Onzorgvuldig behandelen tijdens reparatie kan de levensduur drastisch doen verminderen.
Zorg ervoor dat u tijdens reparatie via een polsband met weerstand verbonden bent met hetzelfde potentiaal als de massa van het apparaat.
Houd componenten en hulpmiddelen ook op ditzelfde potentiaal.

(F) **ATTENTION**

Tous les IC et beaucoup d'autres semi-conducteurs sont sensibles aux décharges statiques (ESD).
Leur longévité pourrait être considérablement écourtée par le fait qu'aucune précaution n'est prise a leur manipulation.
Lors de réparations, s'assurer de bien être relié au même potentiel que la masse de l'appareil et enfiler le bracelet serti d'une résistance de sécurité.
Veiller a ce que les composants ainsi que les outils que l'on utilise soient également a ce potentiel.

(D) **WARNUNG**

Alle IC und viele andere Halbleiter sind empfindlich gegen elektrostatische Entladungen (ESD).
Unsorgfältige Behandlung bei der Reparatur kann die Lebensdauer drastisch vermindern.
Sorgen sie dafür, das Sie im Reparaturfall über ein Pulsarmband mit Widerstand mit dem Massepotential des Gerätes verbunden sind.
Halten Sie Bauteile und Hilfsmittel ebenfalls auf diesem Potential.

(I) **AVVERTIMENTO**

Tutti IC e parecchi semi-conduttori sono sensibili alle scariche statiche (ESD).
La loro longevita potrebbe essere fortemente ridatta in caso di non osservazione della piu grande cauzione alla loro manipolazione.
Durante le riparazioni occorre quindi essere collegato allo stesso potenziale che quello della massa dell'apparecchio tramite un braccialetto a resistenza.
Assicurarsi che i componenti e anche gli utensili con quali si lavora siano anche a questo potenziale.

(GB)

Safety regulations require that the set be restored to its original condition and that parts which are identical with those specified be used.

(NL)

Veiligheidsbepalingen vereisen, dat het apparaat in zijn oorspronkelijke toestand wordt terug gebracht en dat onderdelen, identiek aan de gespecifieerde worden toegepast.

(D)

Bei jeder Reparatur sind die geltenden Sicherheitsvorschriften zu beachten.
Der Originalzustand des Gerats darf nicht verandert werden.
Fur Reparaturen sind Original-Ersatzteile zu verwenden.

(I)

Le norme di sicurezza esigono che l'apparecchio venga rimesso nelle condizioni originali e che siano utilizzati pezzi di ricambiago identici a quelli specificati.

(F)

Les normes de sécurité exigent que l'appareil soit remis a l'état d'origine et que soient utilisées les pièces de rechange identiques à celles spécifiées.

SHOCK, FIRE HAZARD SERVICE TEST:

CAUTION: After servicing this appliance and prior to returning to customer, measure the resistance between either primary AC cord connector pins (with unit NOT connected to AC mains and its Power switch ON), and the face or Front Panel of product and controls and chassis bottom,
Any resistance measurement less than 1 Megohms should cause unit to be repaired or corrected before AC power is applied, and verified before return to user/customer.
Ref.UL Standard NO.1492.

NOTE ON SAFETY:

Symbol ⚠ : Fire or electrical shock hazard. Only original parts should be used to replace any part with symbol ⚠
Any other component substitution(other than original type), may increase risk or fire or electrical shock hazard.

"Pour votre sécurité, ces documents doivent être utilisés par des spécialistes agréés, seuls habilités à réparer votre appareil en panne."

LASER SAFETY

This unit employs a laser. Only a qualified service person should remove the cover or attempt to service this device, due to possible eye injury.

LASER DEVICE UNIT

Type:	SemiconductorlaserGaAlAs
Wave length:	650 nm (DVD)
	780 nm (VCD/CD)
Output Power:	7 mW (DVD)
	10 mW (VCD/CD)
Beam divergence:	60 degree

USE OF CONTROLS OR ADJUSTMENTS OR PERFORMANCE OF PROCEDURE OTHER THAN THOSE SPECIFIED HEREIN MAY RESULT IN HAZARDOUS RADIATION EXPOSURE.

AVOID DIRECT EXPOSURE TO BEAM

WARNING

The use of optical instruments with this product will increase eye hazard.
Repair handling should take place as much as possible with a disc loaded inside the player

WARNING LOCATION: INSIDE ON LASER COVERSHIELD

CAUTION VISIBLE AND INVISIBLE LASER RADIATION WHEN OPEN AVOID EXPOSURE TO BEAM
ADVARSEL SYNLIG OG USYNLIG LASERSTRÅLING VED ÅBNING UNDGÅ UDSÆTTELSE FOR STRÅLING
ADVARSEL SYNLIG OG USYNLIG LASERSTRÅLING NÅR DEKSEL ÅPNES UNNGÅ EKSPONERING FOR STRÅLEN
VARNING SYNLIG OCH OSYNLIG LASERSTRÅLNING NÄR DENNA DEL ÄR ÖPPNAD BETRAKTA EJ STRÅLEN
VARO! AVATT AESSA OLET ALTTIINA NÄKYVÄLLE JA NÄKYMÄTTÖMÄLLE LASER SÄTEILYLLE. ÄLÄ KATSO SÄTEESEEN
VORSICHT SICHTBARE UND UNSICHTBARE LASERSTRAHLUNG WENN ABDECKUNG GEÖFFNET NICHT DEM STRAHL AUSSETSEN
DANGER VISIBLE AND INVISIBLE LASER RADIATION WHEN OPEN AVOID DIRECT EXPOSURE TO BEAM
ATTENTION RAYONNEMENT LASER VISIBLE ET INVISIBLE EN CAS D'OUVERTURE EXPOSITION DANGEREUSE AU FAISCEAU

Warning for powersupply on position 1005

The primary side of the powersupply including the heatsink carries live mains voltage when the player is connected to the mains even when the player is swiched off !
This primary area is not shielded so it is possible to touch copper tracks and/or components when servicing the player. Service personnel have to take precautions to prevent touching this area or components in this area .
The primary side of the powersupply has been indicated with a lightning stroke and a stripe-marked printed on the printed wiring board

CL06532096_022.eps
060700

2.1 Notes

2.1.1 DVD-Module

For repair of the DVD-module SD3, the service manual 3122 785 11010 has to be used.

2.1.2 ComPair

For assistance with the repair process of the monoboard an electronic Fault finding guidance has been developed , this program is called ComPair.
This ComPair program is available on CDROM.
The Version of the CDROM for repair of the monoboard is V1.3 or higher and can be ordered with codenumber : 4822 727 21637.
This is an update CDROM , so when the COMPAIR CDROM is used for the first time , one has to install the ComPair ENGINE CDROM V1.2 first.
The V1.2 CDROM can be ordered with codenumber 4822 727 634 and has to registered after installation , the procedure for registration is explained in the help file of the program and in the booklet from the CDROM.
The cable to connect the monoboard with a PC can be ordered with codenumber 3122 785 90017.
All the hardware and software requirements of the systems necessary for working with ComPair is described on the CDROM.

Introduction

English

Philips DVD Video

Introduction

Your Philips DVD Video player will play digital video discs conforming to the universal DVD Video standard. The unique features on DVD Video, such as selection of sound track, subtitle languages and different camera angles (again depending on the disc), are all supported.
In addition to DVD Video discs, you will be able to play all Video CDs and Audio CDs.

DVD Video

You will recognize DVD Video discs by the logo shown. Depending on the material on the disc (a movie, video clips, a drama series, etc.) the disc may have one or more Titles.

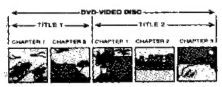

DVD VIDEO

Video CD

You will recognize Video CDs by the logo shown.

COMPACT disc DIGITAL VIDEO

Super Video CD (SVCD)

SVCDs are based on the Super VCD IO Standard, referring to the Standard of Electronics Industry of the People's Republic of China.

Audio CD

Audio CDs contain music tracks only.
You will recognize Audio CDs by the logo shown.

COMPACT disc DIGITAL AUDIO

MP3 (MPEG Audio Layer 3)

This player supports the MP3 format which contains compressed music tracks.

Note:
– Only the first session of multisession discs is supported.

Unpacking

First check and identify the contents of your DVD Video player package.
You should have the following items.
– DVD Video player
– AC power cord
– Remote Control with batteries
– Audio cable
– CVBS Video cable
– SCART cable
– Instructions for use
If any item is damaged or missing, contact your retailer or Philips.
Keep the packaging material for future transportation.

Remote Control Battery

Installation

- Insert batteries as indicated inside the battery compartment.

Caution: Do not mix old and new batteries. Never mix different types of batteries (standard, alkaline, etc.).

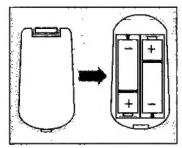

Environmental Information

- Your system consists of materials that can be recycled and reused if disassembled by a specialized company. Please observe the local regulations regarding the disposal of packaging materials, exhausted batteries and old equipment.

Safety Information

- Do not expose the system to excessive moisture, rain, sand, or heat sources.
- Place the player on a firm, flat surface.
- Keep the player away from domestic heating equipment and direct sunlight.
- In a cabinet, allow about 2.5 cm (1 inch) of free space all around the player for adequate ventilation.
- If the DVD Video player cannot read CDs/DVDs correctly, use a commonly available cleaning CD/DVD to clean the lens before taking the DVD Video player to be repaired. Other cleaning methods may destroy the lens. Always keep the tray closed to avoid dust on the lens.
- The lens may cloud over when the DVD Video player is suddenly moved from cold to warm surroundings. Playing a CD/DVD is not possible then. Leave the power on for about one hour with no disc in the unit until normal playback is possible.

Cleaning Discs

- When a disc becomes dirty, clean it with a cleaning cloth. Wipe the disc from the center out, in a straight line.
- Do not use solvents such as benzine, thinner, commercially available cleaners, or anti-static spray intended for analog discs.

Functional Overview

English

Front and Rear Panels

STANDBY-ON
– switches the player to standby mode or ON

|◄◄ PREV
– goes to previous chapter or track

►►| NEXT
– goes to next chapter or track

Disc Tray

DISPLAY
– shows the current status of the player

►II PLAY/PAUSE
– starts/interrupts playback

■ STOP
– stops playback

▲ EJECT
– opens/closes the disc tray

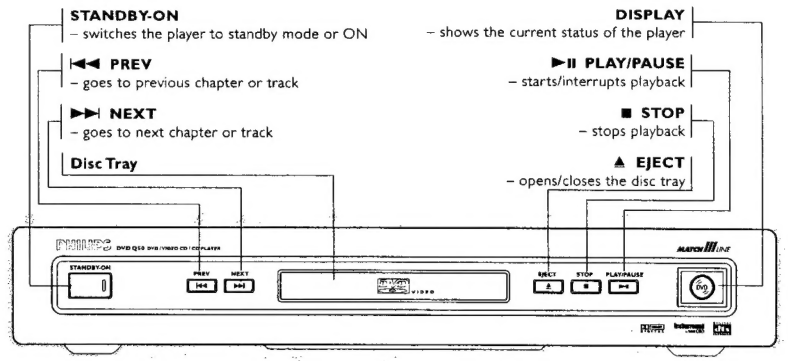

MAINS (AC Power)
– connect to power source

COAXIAL (Digital audio out)
– connect to digital (coaxial) audio equipment

OPTICAL (Digital audio out)
– connect to digital (optical) audio equipment

MULTICHANNEL AUDIO OUT
(For connection to a multichannel receiver)
– center speaker, subwoofer, front and surround speakers connection

AUDIO OUT (Left/Right)
– connect to an amplifier, receiver or stereo system

Pr/Cr Pb/Cb Y COMPONENT VIDEO OUT
– connect to a TV with Pr/Cr Pb/Cb Y Component Video inputs

TV OUT (VIDEO OUT)
– connect to a TV with SCART

S-VIDEO OUT (Y/C)
– connect to a TV with S-Video (Y/C) inputs

(CVBS) VIDEO OUT
– connect to a TV with CVBS video inputs

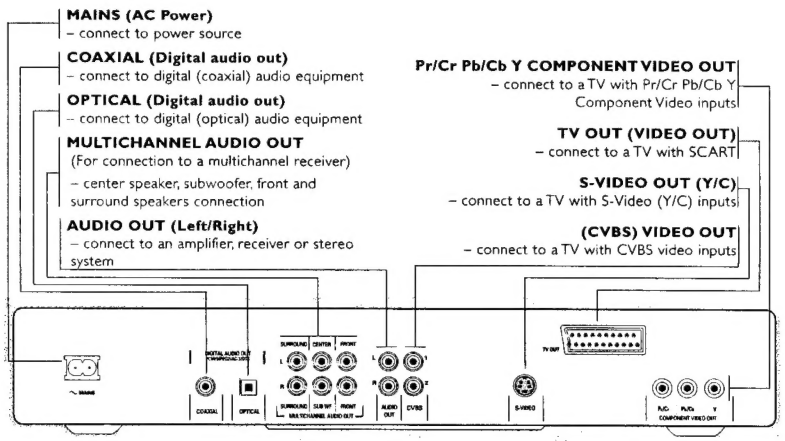

Caution: Do not touch the inner pins of the jacks on the rear panel. Electrostatic discharge may cause permanent damage to the unit.

Remote Control

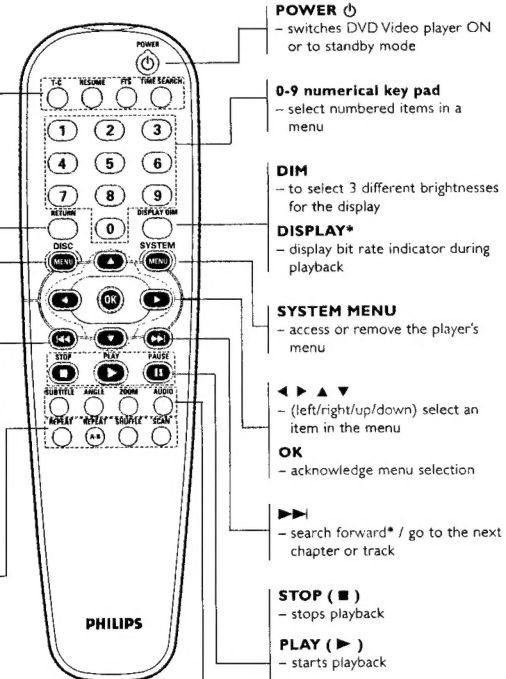

T-C
– select title/chapter

RESUME
– to continue playback from STOP/PAUSE mode

FTS
– activate/deactivate Favourite Track Selection

TIME SEARCH
– starts playback at any chosen time on a disc

RETURN
– go back to previous menu

DISC MENU
– access menu of a DVD disc

⏮
– search backward* / go to a previous chapter or track

REPEAT
– repeat chapter, track, title, disc

REPEAT (A-B)
– repeat a specific segment

SHUFFLE
– play tracks in random order

SCAN
– play the first 10 seconds of each track/chapter within a disc

POWER ⏻
– switches DVD Video player ON or to standby mode

0-9 numerical key pad
– select numbered items in a menu

DIM
– to select 3 different brightnesses for the display

DISPLAY*
– display bit rate indicator during playback

SYSTEM MENU
– access or remove the player's menu

◄ ► ▲ ▼
– (left/right/up/down) select an item in the menu

OK
– acknowledge menu selection

⏭
– search forward* / go to the next chapter or track

STOP (■)
– stops playback

PLAY (►)
– starts playback

PAUSE (II)
– pause playback temporarily / frame-by-frame playback

SUBTITLE
– select a subtitle language

ANGLE
– select a DVD camera angle

ZOOM
– enlarge video image

AUDIO
– select an audio language

** Press and hold key for about two seconds*

Preparation

General Notes

- Depending on your TV and other equipment you wish to connect, there are various ways you could connect the player. Use only one of the connections described below.
- Please refer to the manuals of your TV, VCR, Stereo System or other devices as necessary to make the best connections.
- For better sound reproduction, connect the player's audio out jacks to the audio in jacks of your amplifier, receiver, stereo or audio/video equipment. See 'Connecting to Optional Equipment'.

Caution:
– Make sure the DVD player is connected directly to the TV. Set the TV to the correct video input channel.
– Do not connect the player's audio out jack to the phono in jack of your audio system.
– Do not connect your DVD player to the TV via your VCR. The DVD image could be distorted by the copy protection system.
– After all connections are made, connect the AC power cord to an AC power outlet in your home.

Connecting to a TV

- Make one of the following connections, depending on the capabilities of your existing equipment.

SCART connection

1 Connect the SCART to the corresponding connector on the TV using the SCART cable supplied ***(Z)***.

If your TV is not equipped with a SCART you can select one of the following alternative connections:

S-Video (Y/C) connection

1 Connect the Y/C S-VIDEO OUT jack on the DVD player to the S-Video in jack on the TV using an optional S-Video cable ***(Y)***.
2 Connect the Left and Right AUDIO OUT jacks of the DVD player to the audio left/right in jacks on the TV ***(A)***.

CVBS connection

1 Connect the (CVBS) VIDEO OUT jack on the DVD player to the video in jack on the TV using the video cable supplied ***(X)***.
2 Connect the Left and Right AUDIO OUT jacks of the DVD player to the audio left/right in jacks on the TV ***(A)***.

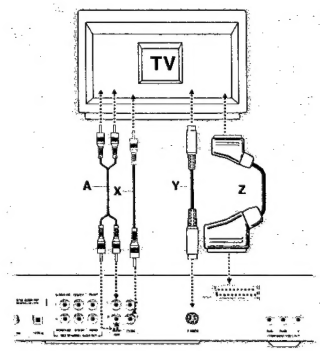

Component Video (Pr/Cr Pb/Cb Y) connection

1 Connect the Pr/Cr Pb/Cb Y VIDEO OUT jacks on the DVD player to the corresponding in jacks on the TV using an optional Pr/Cr Pb/Cb Y cable ***(W)***.
2 Connect the Left and Right AUDIO OUT jacks of the DVD player to the audio left/right in jacks on the TV ***(A)***.

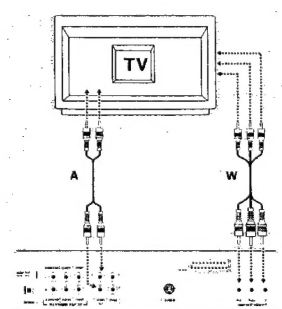

Connecting to Optional Equipment

Connecting to an amplifier equipped with two channel analog stereo or Dolby Surround

1 Connect the Left and Right audio out jacks of the DVD player to the audio left and right in jacks on your amplifier, receiver or stereo system, using the optional audio cable ***(A)***.

Note:
– You cannot use the MP3 function with the Digital Out connectors.

Connecting to an amplifier equipped with two channel digital stereo (PCM) or to an Audio/Video receiver equipped with a multi-channel decoder (Dolby Digital™, MPEG 2 and DTS)

1 Connect the player's digital audio out jack (optical **G** or coaxial ***F***) to the corresponding in jack on your amplifier. Use an optional digital (optical **G** or coaxial ***F***) audio cable.
2 You will need to activate the player's digital output (see 'Personal Preferences').

Digital Multi-channel sound
The digital multi-channel connection provides the best sound quality. For this you need a multi-channel A/V receiver that supports one or more of the audio formats supported by your DVD player (MPEG 2, Dolby Digital™ and DTS). Check the receiver manual and the logos on the front of the receiver.

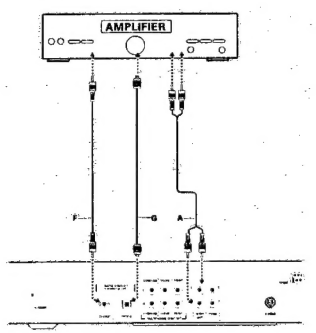

Warning:
Due to DTS Licencing agreement, the digital output will also be in DTS digital out when DTS audio stream is selected.

Note:
– If the audio format of the digital output does not match the capabilities of your receiver, the receiver will produce a strong, distorted sound or no sound at all.
– Six Channel Digital Surround Sound via digital connection can only be obtained if your receiver has a Digital Multi-channel decoder.
– To see the selected audio format of the current DVD in the Status Window, press SYSTEM MENU or Audio button.

Analog connection to a multi-channel A/V receiver with 6 CH connectors (Dolby Digital & DTS)

This DVD player contains a multi-channel decoder. This enables playback of DVDs recorded in Multi-channel Surround without the need for an optional decoder.

1 Connect the audio out jacks for Center speaker and Subwoofer connection ***(C)*** to the corresponding in jacks on your receiver.
2 Connect the audio Left and Right out jacks for Front speaker connection ***(B)*** to the corresponding in jack sockets on your receiver.
3 Connect the audio Left and Right out jacks for Surround speaker connection ***(D)*** to the corresponding in jacks on your receiver.
4 Make the appropriate Sound settings for Analog Output and Speaker Settings in the Personal Preferences menu.

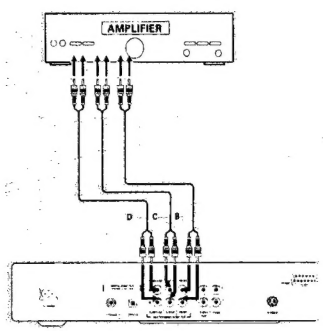

NTSC/PAL Settings

You can switch the NTSC/PAL setting of the DVD player to match the video signal of your TV. This setting only affects the television's on-screen display that shows the stop and setup modes. You may select either NTSC or PAL. To change the DVD player setting to PAL or NTSC, follow the steps below.

1 Unplug the DVD player from the mains.
2 Press and hold ■ and ▶▶|, on the front of the DVD player. While holding ■ and ▶▶|, plug in the mains.
3 After PAL or NTSC appears on the display of the DVD player, release ■ and ▶▶| at the same time. The PAL or NTSC indicator that appears on the display indicates the current setting.
4 To change the setting, press ▶▶| within three seconds. The new setting (PAL or NTSC) will appear on the display.

NTSC/PAL Conversion

This player is equipped with a NTSC/PAL conversion feature to convert the video output of the disc to match your TV system. The conversions supported are as below:

Disc		Output format		
		Selected mode		
Type	Format	NTSC	PAL	AUTO
DVD	NTSC	NTSC	PAL	NTSC
	PAL	Not Supported	PAL	PAL
VCD	NTSC	NTSC	PAL	NTSC
	PAL	NTSC	PAL	PAL

1 In the Preference Menu, select **TV System**.
2 Press ▲ or ▼ to select PAL, NTSC or AUTO.

Notes:
– AUTO can only be selected when using a TV that has both the NTSC and PAL systems.
– This is applicable for CVBS output on cinch and SCART only
– Slight picture distortions may occur due to this conversion. This is normal. Thus, the AUTO format is most suitable for the best picture quality.

General Explanation

About this manual

This manual gives the basic instructions for operating the DVD player. Some DVDs require specific operation or allow only limited operation during playback. When this occurs, the symbol ⊘ appears on the TV screen, indicating that the operation is not permitted by the player or the disc.

Remote control operation

- Unless stated, all operations can be performed by the remote control. Always point the remote control directly at the player, making sure there are no obstructions between the remote and the player.
  Corresponding keys on the front panel of the player can also be used.

Menu bar operation

- A number of operations can be done with the menu bar on the screen. The menu bar icons can be accessed by pressing the cursor keys on the remote control.
- Pressing SYSTEM MENU while the menu bar is displayed will clear the menu bar from the screen.
- The selected item will be highlighted, and the appropriate cursor keys to operate it will be displayed below the icon.
- The symbols < or > indicate more items are available at the left/right of the menu bar. Press ◀ or ▶ to select these items.

Initial Setup (Virgin Mode)

General

In 'Initial Setup' you may have to set your preferences for some of the player's features. *(not applicable for all models)*

Operation

After switching on the player for the very first time, the 'Initial Setup Screen' will appear.
The menu for the first item to be set is displayed and the first option is highlighted.

- Use the ▼▲ keys to go through the options in the menu. The icon of the selected option will be highlighted.
- Use OK to confirm your selection and to go to the next menu.

Note:
– Preferences have to be set in the order of which the item menus will appear on the screen.
– The 'Initial Setup' screen will only disappear after the settings for the last item have been confirmed.
– If any keys other than ▼▲ or OK are pressed, ✕ will appear on the screen.
– If the player is switched off while setting personal preferences, all preferences have to be set again after switching the player on again.

The following items may have to be set in Initial Setup:

Menu language

You can choose from different languages. The On Screen Menus will be displayed in the language available on the player.

Audio language

You can choose from different languages. If available on the disc, the player will play the audio in the selected language. If the selected language is not available, speech will revert to the first spoken language on the disc.

Subtitle language

You can choose from different subtitle languages. If available on the disc, subtitles will be in the language choosen. If the selected language is not available, subtitles will revert to the first subtitle language on the disc.

TV Shape

If you have a wide screen (16:9) TV, select 16:9.
If you have a regular (4:3) TV, select 4:3.
If you have a 4:3 TV, you can also select between:
Letterbox for a 'wide-screen' picture with black bars top and bottom, or Pan Scan, for a full-height picture with the sides trimmed. If a disc supports the format, the picture will be shown accordingly.

Country

Select your country. This is used as input for the 'Parental Control' feature (see 'Access Control').

Note:
– All these items may have to be set during 'Initial Setup'. After that, they can always be changed in the Personal Preferences Menu.

Display on Front Panel

Various icons will appear on the front panel display depending on the current status of the player.

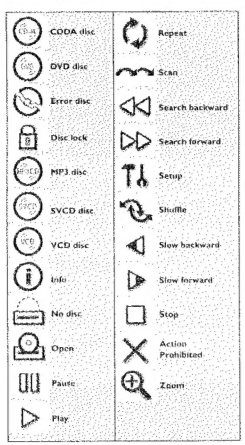

Menu Bar on TV Screen

As there are multiple menu bars, the items on the menu bar are arranged according to usage and availability of direct access keys. Pressing the SYSTEM MENU keys repeatedly will toggle through menu bar 1, menu bar 2, menu bar 3 and OFF.

Menu bar 1

- Personal Preferences
- Subtitle Language
- Audio Language
- Colour Setting (Smart Picture)
- Sound

Menu bar 2

- Step by step playback
- Slow motion
- Fast motion
- Angle
- Zoom

Menu bar 3

- Title
- Chapter
- Time Search
- Favorite Track Selection (FTS)
- Wake up Timer

Temporary Feedback Field Icons

- Scan
- Repeat All
- Repeat Title
- Repeat Track
- Repeat Chapter
- Shuffle
- Shuffle Repeat
- Repeat A to end
- Repeat A-B
- Angle
- Child Lock On
- Child Safe
- Resume
- Action prohibited

Personal Preferences

You can set your own personal preferences on the player.

General operation:

1. Press SYSTEM MENU on the remote control.
2. Select in the menu bar.
   → The Personal Preferences menu appears.
3. Use the ◄ ► ▲ ▼ keys to toggle through the menus, submenus and submenu options.
   → When a menu item is selected, the cursor keys (on the remote control) to operate the item are displayed next to the item.
4. Press OK to confirm and return to the main menu.
   The following items can be adapted:

Picture

– TV Shape

If you have a wide screen (16:9) TV, select 16:9.
If you have a regular (4:3) TV, select 4:3.
If you have a 4:3 TV, you can also select between:
Letterbox for a 'wide screen' picture with black bars at the top and bottom of the screen, or Pan Scan, for a full-height picture with the sides trimmed. If a disc supports the format, the picture will be shown accordingly.

– Black level shift (NTSC users only)

Select ON for adapting the Colour dynamics to obtain richer contrasts.

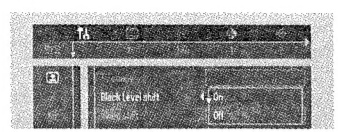

– Video shift

The factory centers the video on your TV screen. Use this setting to personalize the position of the picture on your TV by moving it to the left or right.

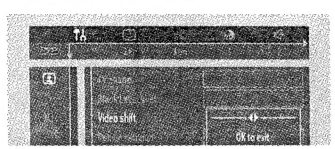

– Colour settings

You can select one of five predefined sets of colour settings and one set (Personal) which you can define yourself.

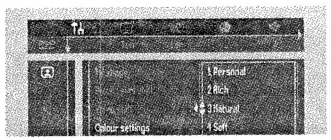

– Personal colour

Allows you to fine-tune the selected colour settings saturation, brightness and contrast.

– DCC (on Pr/Cr Pb/Cb Y Component Video Out only)

Digital Crystal Clear (DCC) allows you to fine-tune the following parameters on the progressive scan component output.

- **Gamma** - allows you to adjust the intensity of the picture non-linearly. A positive value will allows you to bring out low level detail on dark scene while a negative value will emphasis on contrast.
- **Sharpness** - allows you to adjust sharpness of the picture.
- **Chroma Delay** - is where the Chroma (color) and luma (brightness) signal is out of synchronize. This allows you to adjust the advance delay of the chroma signal to yield a perfectly clear picture.

– TV System

Allows you to select between PAL, NTSC and AUTO mode depending on your TV.

Note:
– Refer to "NTSC/PAL Conversion".

Sound

– Digital output

Factory setting: ALL. This means coaxial and optical output is on. If you are not connecting to equipment with a digital input, change the setting to OFF.
If your equipment doesn't include a digital multi-channel decoder, set the digital output to PCM only (Pulse Code Modulation).

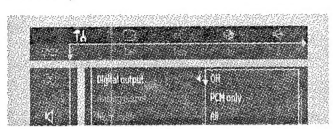

– Analog output

Select Stereo, Dolby Surround, 3D Sound (TruSurround) or multichannel output to match your system's playback capability.

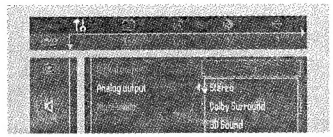

– Night Mode

Optimizes the dynamics of the sound for low volume playback.

– Speaker settings

Allows you to select speaker settings, volume balance and delay time and to test the speaker settings.
Speaker settings are only active on the Analog Multi-Channel Output. (See appendix)

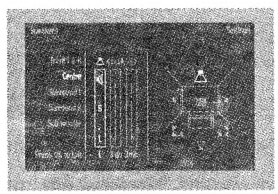

– PCM Output

Allows to select PCM digital output between 48kHz and 96kHz. When 48kHz has been selected, 96kHz (if available on disc) PCM data stream will be converted to 48kHz.

– Karaoke vocal

Put this setting to ON only when a multi-channel karaoke DVD is being played. The karaoke channels on the disc will then be mixed into a normal stereo sound.

Language

Select the required Menu, Audio and Subtitle language. Audio language and Subtitle language can also be adapted using the Menu bar.

Features

– Access Control

Access Control contains the following features:
Child Lock - When Child Lock is set to ON, a 4-digit code must be entered in order to play discs.
Parental control - Allows the conditional viewing of DVDs containing Parental Control information (see 'Access Control').

– Status Window

Displays the current status of the player and appears with the menu bar. When disc playback is stopped, it is displayed with the 'Temporary Feedback Field' in the default screen. See 'On-Screen Display' information.
The factory setting is ON. Select OFF to suppress display of the Status Window.

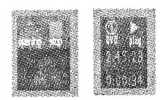

– DIM

You can select the desired brightness for the front panel display.

- Normal brightness will appears on the display when you press **DISPLAY DIM** on the remote control.
- Medium brightness will appears on the display when you press **DISPLAY DIM** a second time on the remote control.
- Low brightness will appears on the display when you press **DISPLAY DIM** a third time on the remote control.
- Brightness will turn OFF when you press **DISPLAY DIM** a fourth time on the remote control.

– Bit Rate Indicator

Press and hold **DISPLAY DIM** key for 2 seconds. When activated, the bit rate for video and audio, as well as the total bit rate is displayed. This is only applicable during playback of DVD and SVCD discs.

– Help text

When set to ON, help text describes the icons selected. Select OFF if you no longer require the help text.

– Low Power Standby

If this is set to ON, the player will go in low-power standby when the standby button is pressed (front panel or remote control).

– Beeper

The beeper can be set to ON or OFF.

– PBC (Playback Control)

The Playback Control can be set to ON or OFF.

– Smart Power OFF

Puts the set to standby after a predefined time. This can be set to ON or OFF.

Operation

Loading Discs

1 Press EJECT on the front of the player to open the disc tray.
2 Load your chosen disc in the tray, label side up.
3 Press EJECT again to close the tray.
→ READ appears in the status window and on the player display, and playback starts automatically.

Note:
– If 'Child Lock' is set to ON and the disc inserted is not authorized, the 4-digit code must be entered and/or the disc must be authorized (see 'Access Control').

Playing a DVD Video and Video CD

Playing a disc

- After inserting the disc and closing the tray, playback starts automatically. The status window of the player display shows the type of disc loaded.
- The disc may invite you to select an item from a menu. If the selections are numbered, press the appropriate numerical key; if not, use the ▼▲◄► keys to highlight your selection, then press OK.
- The number of the current title and chapter are displayed.
- Playback may stop at the end of the Title and you may return to the DVD disc menu. To go to the next title, press ►.
- To stop playback, press ■.
→ The default screen will appear, giving information about the current status.
- You can resume playback from the point at which you stopped playback. Press ►; when you see the Resume icon I► on the screen, press ► again.
→ The RESUME feature applies not only to the disc in the player, but also to the last four discs you have played. Simply reload the disc and press **RESUME** on the remote control. Or, press I► when you see the Resume icon I► on the screen, then press ► again.

Note:
– DVDs may have a region code. Your player will not play discs that have a region code different from the region code of your player.

General Features

Note:
– Unless stated, all operations described are based on remote control use. Some operations can be carried out using the menu bar on the screen.

Moving to another title/ chapter

When a disc has more than one title or chapter, you can move to another title/chapter as follows:
- Press **SYSTEM MENU**, then select ⊠ or ⊠ in the menu bar.
- Press ▲ or ▼ to select a title/chapter.

Slow Motion

- Select ⊠ (SLOW MOTION) in the menu bar.
- Use the ▼ keys to enter the SLOW MOTION menu.
→ Playback will pause.
- Use the cursor keys ◄► to select the required speed: -1, -1/2, -1/4 or -1/8 (backward), or +1/8, +1/4, +1/2 or +1 (forward).
- Select 1 to play the disc at normal speed again.
- If II is pressed, the speed will be set to zero (PAUSE).
- To exit slow motion mode, press ► or ▲.

Still Picture and Frame-by-frame playback

- Select ⊠ (**STEP**) in the menu bar.
- Use the ▼ key to enter the step by step menu.
→ Playback will pause.
- Use the cursor keys ◄► to select the previous or next picture frame.
- To exit step by step playback, press ► or ▲.

You can also step forward by pressing II repeatedly on the remote control.

Scan

Scanning plays the first 10 seconds of each chapter/track on the disc.
- Press **SCAN**.
- To continue playback at your chosen chapter/track, press **SCAN** again or press ►.

Search

- Select ⊠ (FAST MOTION) in the menu bar.
- Use the ▼ keys to enter the FAST MOTION menu.
- Use the ◄► keys to select the required speed: -32, -8 or -4 (backward), or +4, +8, +32 (forward).
- Select 1 to play the disc at normal speed again.
- To exit FAST MOTION mode, press ► or ▲.

To search forward or backward through different speeds, you can also hold down I◄◄ or ►►I.

Repeat

DVD Video Discs
Repeat chapter/title/disc
- To repeat the current chapter, press REPEAT.
→ ↻ appears on the DVD player display.
- To repeat the current title, press REPEAT a second time.
→ ↻ appears on the DVD player display.
- To repeat the entire disc, press REPEAT a third time.
→ ↻ appears on the DVD player display.
- To exit Repeat mode, press REPEAT a fourth time.

Video CDs
Repeat track/disc
- To repeat the current track, press REPEAT.
→ ↻ appears on the DVD player display.
- To repeat the entire disc, press REPEAT a second time.
→ ↻ appears on the DVD player display.
- To exit Repeat mode, press REPEAT a third time.

Repeat A-B

To repeat a specific portion of a title:
- Press REPEAT A-B at your chosen starting point.
→ ↻ appears briefly on the DVD player display.
- Press REPEAT A-B again at your chosen end point.
→ ↻ appears briefly on the DVD player display, and the repeat sequence begins.
- To cancel the sequence and continue regular playback, press REPEAT A-B.

Shuffle

DVD Video discs
This shuffles the playing order of chapters within a title, if the title has more than one chapter.
- Press SHUFFLE during playback.
→ **SHUFFLE** appears on the TV screen for about two seconds.
- To return to normal playback, press SHUFFLE again.

Video CDs
- Press SHUFFLE during playback.
→ **SHUFFLE** appears on the TV screen for about two seconds.
- To return to normal playback, press SHUFFLE again.

Time search

The Time Search function allows you to start playing at any chosen time on the disc.
1 Select ⊠ (TIME SEARCH) in the menu bar
2 Press ▼.
→ Playback will pause.
→ A time edit box appears on the screen, showing the elapsed playing time of the current disc.
3 Use the numeric keys to enter the required start time. Enter hours, minutes and seconds from left to right in the box.
→ Each time an item has been entered, the next item will be highlighted.
4 Press OK to confirm the start time.
→ The time edit box will disappear and playback starts from the selected time on the disc.

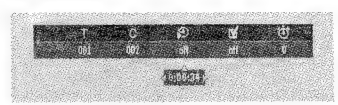

5 Press SYSTEM MENU to remove the menu bar.

Zoom

The Zoom function allows you to enlarge the video image and to pan through the enlarged image.

- Select 🔍 (**ZOOM**).
- Press ▲/▼ to activate the **ZOOM** function and select the required zoom factor: 1.33 or 2 or 4.
  → Playback will pause.
  → The selected zoom factor appears below the Zoom icon in the menu bar, and '*Press OK to pan*' appears below the menu bar.
  → The picture will change accordingly.
- Press OK to confirm the selection.
  → The panning icons appear on the screen.
- Use the ◀ ▶ ▲ ▼ keys to pan across the screen.
- When OK is pressed only the zoomed picture will be shown on the screen.
- To exit **ZOOM** mode:
  – Press ▶ to resume playback.

FTS-Video

- The FTS-Video function allows you to store your favorite titles and chapters (DVD) and favorite tracks and indexes (VCD) for a particular disc in the player memory.
- FTS program can contain 20 items (titles, chapters etc.).
- A programmed FTS will be placed on top of the list when playback is activated. When the list is full, a new program will replace the last program on the list.
- The program can be selected and played at any time.

Storing an FTS-Video Program

- While playback is stopped, select **VIDEO FTS** ☑ in the menu bar.
- Press ▼ to open the menu.
  → The **VIDEO FTS** menu appears.
- Press ▶ or ◀ to select ON or OFF.

Storing titles/tracks

- Press ▼ to select **TITLES**.
- Use ▶ and ◀ to select the required title.
- Press OK if you wish to store the entire title.
  → The title number will be added to the list of selections.

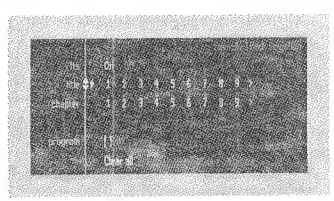

Storing chapters/indexes

- Press ▼ on the selected title number.
  → The title number will be marked and the highlight moves to the first available chapter number for this title.
- Use ▶ and ◀ to select the required chapter number.
- Press OK to confirm the selection.
  → The title/chapter selection will be added to the list of selections.
- Press SYSTEM MENU to exit the **VIDEO FTS** ☑ menu.

Erasing an FTS-Video Program

- While playback is stopped, select **VIDEO FTS** ☑ in the menu bar.
- Use ▼ to select **PROGRAM**.
- Use ▶ and ◀ to select the required number.
- Press OK to erase the selection.
- Press SYSTEM MENU to exit.

Erasing all selections

- While playback is stopped, select **VIDEO FTS** ☑ in the menu bar.
- Use ▼ to select **CLEAR ALL**.
- Press OK.
  → All selections will be erased.
- Press SYSTEM MENU to exit.

Auto Wake-up Timer

The wake-up timer allows your player to turn on after a preset time.

1. Select ⏲ in the menu bar.
2. Press ▼.
   → Time edit box will appear.
3. Use the ▲ or ▼ to select the sleep time. The maximum time you can select is 600 minutes. Selection is made by 30 minutes steps each time.
4. Press OK to confirm the selection.
5. The Wake-up Timer will activate when the set is switch to standby-mode.

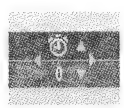

Special DVD Features

Checking the contents of DVD Video discs: Menus

DVDs may contain menus to navigate the disc and access special features. To use the menu, press the appropriate numerical key or use the ▼, ▲, ▶, ◀ keys to highlight your selection, then press OK.

Title/Disc menu

- Press **DISC MENU**.
  → If the current title has a menu, the menu will appear on the screen. Otherwise, the disc menu will be displayed.
- The menu can list camera angles, spoken language and subtitle options, and chapters for the title.
- To remove the title menu, press **DISC MENU** again.

Camera Angle

If the disc contains sequences recorded from different camera angles, the angle icon appears, showing the number of available angles and the angle being shown currently. You can then change the camera angle if you wish.

- Use the ▲/▼ keys to select the required angle.
  → After a while, playback changes to the selected angle. The angle icon remains displayed until multiple angles are no longer available.

Changing the audio language

- Select 🔊 (**AUDIO**) in the menu bar.
- Press **AUDIO** or ▲/▼ repeatedly to see the different languages.

Subtitles

- Select 💬 (**SUBTITLE**) in the menu bar.
- Press **SUBTITLE** or ▲/▼ repeatedly to see the different subtitles.

Special Video CD & SVCD Features

Playback Control (PBC)

- Load a Video CD with PBC and press ▶.
- Go through the menu with the keys indicated on the TV screen until your chosen passage starts to play. If a **PBC** menu consists of a list of titles, you can select a title directly.
- Enter your choice with the numerical keys (0-9).
- Press RETURN to go back to the previous menu.
- You may also select **PBC OFF** under Personal Preferences.

Playing an Audio CD

- After loading the disc, playback starts automatically.
- If the TV is on, the Audio CD screen appears.
- The number of tracks and the total playing time of the disc will be shown on the TV screen.
- During playback, the current track number and its elapsed playing time will be shown on the TV screen and on the player display.
- Playback will stop at the end of the disc.
- To stop playback at any other time, press ■.

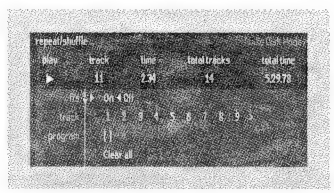

Pause

- Press **II** during playback.
- To return to playback, press ▶.

Search

- To search forward or backward through the disc at four times the normal speed, hold down ⏮◀◀ or ▶▶⏭ for about one second during playback.
  → Search begins, and sound is partially muted.
- To step up to eight times the normal speed, press ⏮◀◀ or ▶▶⏭ again.
  → Search goes to eight times the speed, and the sound is muted.
- To return to four times the normal speed, press ⏮◀◀ or ▶▶⏭ again.
- If the TV is on, search speed and direction are indicated on the screen each time ⏮◀◀ or ▶▶⏭ is pressed.
- To end the search, press ▶ to resume playback or press ■ to stop playback.

Moving to another track

- Press ⏮ or ⏭ briefly during playback to go to the next track or to return to the beginning of the current track.
- Press ⏮ twice briefly to step back to the previous track.
- To go directly to any track, enter the track number using the numerical keys (0-9).

Shuffle

- Press **SHUFFLE** during playback.
  → The playing order of the tracks is changed.
- To return to normal playback, press **SHUFFLE** again.

Repeat track/disc

- To repeat the current track, press REPEAT.
  → 🔁 appears on the DVD player display.
- To repeat the entire disc, press REPEAT a second time.
  → 🔁 appears on the DVD player display.
- To exit Repeat mode, press REPEAT a third time.

Repeat A-B

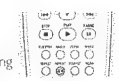

To repeat a specific portion of a track:

- Press REPEAT A-B at your chosen starting point.
  → 🔁 appears on the DVD player display.
- Press REPEAT A-B again at your chosen end point.
  → 🔁 appears on the DVD player display, and the sequence begins to play repeatedly.
- To cancel the sequence and continue playback, press REPEAT A-B.

Scan

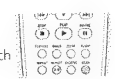

Scanning plays the first 10 seconds of each track on the disc.

- Press **SCAN**.
- To continue playback at your chosen track, press **SCAN** again or press ▶.

Favorite Track Selection (FTS) Program

- The FTS Program allows you to store your favorite tracks for a particular disc in the player memory.
- Each FTS Program can contain 20 tracks.

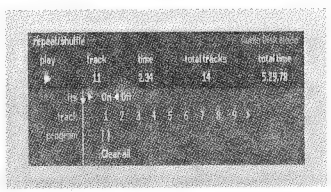

Storing an FTS Program

1. Load a disc and stop playback.
2. Use ▼ to go to the list of available tracks.
3. Use ▶ or ◀ to select tracks from the list.
   To go directly to any track, enter the track number using the numerical keys (0-9).
4. Store each track by pressing OK.
   → The track numbers will be added to the list.
   → The number of tracks and the playing time of the program will be shown on the TV screen and the player display.

   When your FTS Program is complete, press ▶ to start playback or press ▲ to go back to Stop mode. In either case, the FTS Program will be automatically memorized.

Switching FTS ON/OFF

1. Use ▲▼ to select FTS.
2. Use ▶ or ◀ to select either ON or OFF.

Erasing a track from an FTS Program

1. Use ▼ to go to the list of selected tracks.
2. Use ▶ and ◀ to select the track number you wish to erase.
3. Press OK.
   → The track number will be erased from the list of selected tracks.

Erasing the complete program

1. Use ▼ to select **CLEAR ALL**, then press OK.
   → The complete FTS Program for the disc will be erased.

MP3 Disc Features *(for specific version only)*

Support following MP3-CD formats (ISO9660 format):

- Max. 30 characters
- Max. nested directory is 8 levels
- The max. ALB number is 32
- Supported VBR bit-rate
- Supported sampling frequencies for MP3 disc are: 32 kHz, 44.1 kHz, 48 kHz
- Supported Bit-rates of MP3 disc are: 32, 64, 96, 128, 192, 256 (kbps)

Following formats can't be supported

- The files like *.WMA, *.AAC, *.DLF, *.M3U, *.PLS
- Chinese filenames
- The non-session closed discs
- The discs recorded under UDF format

Downloading MP3 files from the Internet or copying songs from your own legal discs is a delicate process.

Sound Quality	Bit Rate	Approximate Reduction Ratio	Approximate total MP3-CD time	Comment
AM radio	32 kbps	40 : 1	40 hrs	Sound quality significantly affected and not recommended
FM radio	64 kbps	20 : 1	20 hrs	
Near-CD	96 kbps	15 : 1	15 hrs	Balanced sound quality compression rate
CD-like	128 kbps	10 : 1	10 hrs	
CD*	256 kbps	5 : 1	5 hrs	Compression rate too suggest to play CDs instead
CD*	320 kbps	3 : 1	3 hrs	

You may experience an occasional "skip" while listening to your MP3 files. This is normal.

Additional note for MP3 disc Playback:

– In compliance with the SDMI, digital-out is muted while playing MP3 discs.
– Due to the recording nature of Digital Audio MP3 (DAM), only Digital Audio music will play.
– The disc reading time may exceed 10 seconds due to the large number of songs compiled onto one disc.
– Only the first session of multisession discs is supported.

Album/Title

This feature allows you to view and select the next or previous MP3 disc Album/Title.

1. Press ▲/▼ to scroll through the previous or next Album.
2. Press ◀/▶ to scroll through the previous or next Track.
3. You can also select the desired album/track number directly using the numeric keys on the remote control.

Note:
– ***In STOP mode:*** *numbers are used for ALBUM selection.*
– ***In PLAY mode:*** *numbers are used for TRACK selection.*

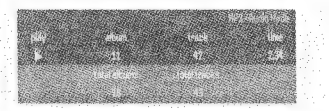

- Only the following functions are possible for MP3 discs:
  – STOP / PLAY / PAUSE
  – SKIP NEXT / PREVIOUS
  – REPEAT (TRACK / ALBUM / DISC)

MP3 Discs - Album/Track/Disc

- To repeat a track, press REPEAT.
  → **REPEAT TRACK** appears on the TV screen.
- To repeat an album, press REPEAT a second time.
  → **REPEAT ALBUM** appears on the TV screen.
- To repeat the entire disc, press REPEAT a third time.
  → **REPEAT DISC** appears on the TV screen.
- To exit REPEAT mode, press REPEAT a fourth time.
  → **REPEAT OFF** appears on the TV screen.

English

Access Control

Access Control: Child Lock (DVD Video and Video CD)

Activating/deactivating the Child Lock

1 When disc playback is stopped, select **ACCESS CONTROL** in the features menu using the ▲/▼ keys.
2 Enter a 4-digit code of your own choice.
3 Enter the code a second time.
4 Move to "**CHILD LOCK**" using the ▲/▼ keys.
5 Move to **LOCK/UNLOCK** using the ▶ key.
6 Select **LOCK** using the ▲/▼ keys.
7 Press OK or ◀ to confirm, then press ◀ again to exit the menu.
➜ Now unauthorized discs will not be played unless the 4-digit code is entered.
8 Select **UNLOCK** to deactivate the **CHILD LOCK**.

Note: Confirmation of the 4-digit code is necessary when:
– The code is entered for the very first time (see above),
– The code is changed (see 'Changing the 4-digit code'),
– The code is cancelled (see 'Changing the 4-digit code').

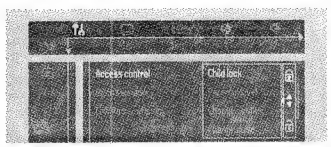

Authorizing discs

- Insert the disc. See 'Loading discs'.
➜ The 'child protect' dialog will appear.
You will be asked to enter your secret code for 'Playback Once' or 'Playback Always.' If you select 'Playback Once', the disc can be played as long as it is in the player and the player is ON. If you select 'Playback Always', the disc will become child safe (authorized) and can always be played, even if the Child Lock is set to ON.

Notes:
– The player memory maintains a list of 120 authorized ('Child safe') disc titles. A disc will be placed in the list when 'Playback Always' is selected in the 'child protect' dialog.
– Each time a 'child safe' disc is played, it will be placed on top of the list. When the list is full and a new disc is added, the last disc in the list will be removed from the list.
– Double-sided DVDs may have a different ID for each side. In order to make the disc 'child safe', each side has to be authorized.
– Multi-volume VCDs may have a different ID for each volume. In order to make the complete set 'child safe', each volume has to be authorized.

Deauthorizing discs

- Insert the disc. See 'Loading discs'.
➜ Playback starts automatically.
- Press ■ while ☺ is visible.
➜ The ☹ will appear and the disc is now deauthorized.

Access Control: Parental Control (DVD Video only)

Movies on DVDs may contain scenes not suitable for children. Therefore, discs may contain 'Parental Control' information which applies to the complete disc or to certain scenes on the disc. These scenes are rated from 1 to 8, and alternative, more suitable scenes are available on the disc. Ratings are country dependent. The 'Parental Control' feature allows you to prevent discs from being played by your children or to have certain discs played with alternative scenes.

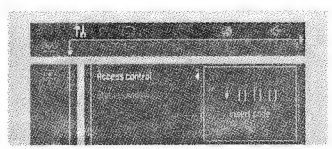

Activating/Deactivating Parental Control

1 When disc playback is stopped, select **ACCESS CONTROL** in the features menu using the ▲/▼ keys.
2 Enter your 4-digit code. If necessary, enter the code a second time.
3 Move to **Parental Control** using the ▲/▼ keys.
4 Move to **VALUE ADJUSTMENT** (1-8) using the ▶ key.
5 Then use the ▲/▼ keys or the numerical keys on the remote control to select a rating from 1 to 8 for the disc inserted.

Rating 0 (displayed as '– –'):
Parental Control is not activated. The Disc will be played in full.

Ratings 1 to 8:
The disc contains scenes not suitable for children. If you set a rating for the player, all scenes with the same rating or lower will be played. Higher rated scenes will not be played unless an alternative is available on the disc. The alternative must have the same rating or a lower one. If no suitable alternative is found, playback will stop and the 4-digit code has to be entered.

6 Press OK or ◀ to confirm, then press ◀ again to exit the menu.

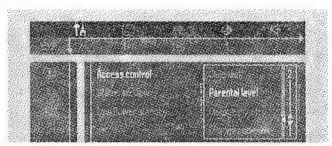

Country

1 When disc playback is stopped, select **ACCESS CONTROL** in the features menu using the ▲/▼ keys.
2 Enter the 4-digit code.
3 Move to **CHANGE COUNTRY** using the ▼ key.
4 Press the ▶ key.
5 Select a country using ▲/▼.
6 Press OK or ◀ to confirm, then press ◀ again to exit the menu.

Changing the 4-digit code

1 When disc playback is stopped, select **ACCESS CONTROL** in the features menu using the ▲/▼ keys.
2 Enter the old code.
3 Move to **CHANGE CODE** using the ▼ key.
4 Press the ▶ key.
5 Enter the new 4-digit code.
6 Enter the code a second time and reconfirm by pressing OK.
7 Press ◀ to exit the menu.

If you forget your 4 digit code

1 Press ■ to exit the 'Child Protect' screen.
2 Select **ACCESS CONTROL** in the features menu using the ▲/▼ keys.
3 Move to **ENTER CODE** using the ▶ key.
4 The 4-digit code can be cancelled by pressing ■ four times in the 'Access Control-Enter Code' dialog.
5 You can then enter a new code (twice!) as described above (Changing the 4 digit code).

Parental Control Disclaimer

This DVD player features the **PARENTAL CONTROL** system which is intended to activate when playing DVD discs furnished with certain software coding. This is according to technical standards adopted by the set maker and disc content industries.
Please note that the **PARENTAL CONTROL** system will not operate a DVD disc which is not furnished with the appropriate software coding. Also note that at the time of release of this DVD player, certain aspects of the technical standards had not been settled between set makers and the disc industries.
On this basis, Philips cannot guarantee the functioning of the **PARENTAL CONTROL** system and denies any liability associated with unintended watching of disc content.
If in doubt, please make sure the disc plays according to your **PARENTAL CONTROL** settings before you allow children access to the player.

English

Before Requesting Service

If it appears that the DVD Video player is faulty, first consult this checklist. Something may have been overlooked. Under no circumstances should you attempt to repair the system yourself; this will invalidate the warranty.

Look for the specific symptom(s). Then perform only the actions listed to remedy the specific symptom(s).

Symptom	Remedy
No power	– Make sure the power cord is properly connected. – Check if there is power at the AC outlet by plugging in another appliance.
No picture	– Check if the TV is switched on. – Check the video connection. – Check if a DVD PAL format disc is inserted.
Distorted picture	– Check the disc for fingerprints and clean the disc with a soft cloth, wiping from the center to the edge in a straight line. – Sometimes a small amount of picture distortion may appear. This is not a malfunction.
Completely distorted picture or no Colour with player menu	– If the picture is distorted completely or if the picture rolls vertically, make sure the NTSC/PAL setting at the DVD player matches the video signal of your television. – If your TV video signal is NTSC, select the NTSC setting at the DVD player. – If your video signal is PAL, select the PAL setting. - See NTSC/PAL SETTINGS.
Distorted or black/white picture with DVD or Video CD	– The disc format does not match your TV's video signal (PAL/NTSC). – If your video signal is PAL, see NTSC/PAL Conversion.
No sound	– Check audio connections. – If you are using a HiFi amplifier, try another sound source.
Distorted sound from HiFi amplifier	– Check to make sure that no audio connections are made to the amplifier's phono input.
No audio at digital output	– Check the digital connections. – Check the settings menu to make sure the digital output is set to ALL or PCM. – Check if the audio format of the selected audio language matches your receiver capabilities. – Not applicable for MP3
Disc can't be played	– Ensure the disc label is facing up. – Clean the disc. – Check if the disc is defective by trying another disc. – Check to see if the disc is defective, badly scratched or warped (not flat).
No return to start-up screen when disc is removed	– Reset the unit by switching the player off, then on again. – Check to see if the program requires another disc to be loaded.
The player does not respond to the remote control	– Aim the remote control directly at the sensor on the front of the player. – Remove any obstacles between the player and the remote control. – Inspect or replace the batteries in the remote control.
Buttons do not work	– In order to completely reset the player, unplug the AC cord from the AC outlet. (Please ensure that the set is not in Initial Setup mode.)
Player does not respond to some operating commands during playback	– Operations may not be permitted by the disc. Refer to the instructions of the disc.
DVD Video player cannot read CDs/DVDs	– Use a commercially available cleaning CD/DVD to clean the lens before sending the DVD Video player for repair.

Appendix

English

Speaker Settings

6 Channel settings

Front speaker

L (Large): When the front speakers can reproduce low frequency signals below 120Hz
S (Small): When the front speakers cannot produce low frequency signals below 120Hz

Center Speaker

L (Large): When the center speaker can reproduce low frequency signals below 120Hz
S (Small): When the center speaker cannot produce low frequency signals below 120Hz
Off: When the center speaker is not connected

Surround speakers

L (Large): When the surround speakers can reproduce low frequency signals below 120Hz
S (Small): When the surround speakers cannot produce low frequency signals below 120Hz
Off: When the surround speakers are not connected

Subwoofer

On: When you connect a subwoofer
Off: When a subwoofer is not connected

Note:
– Certain speaker settings are prohibited by the Dolby Digital licensing agreement.

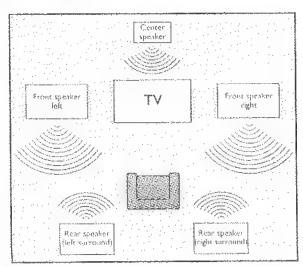

Delay times

The DVD player is set to reproduce correctly synchronized Digital Surround Sound in a listening area where the surround speakers are about 150cm nearer to the listening position than the front speakers, and the center speaker is in line with the front speakers. To adjust for other listening area arrangements, adapt delay times according to the following instructions:

Digital Surround

Measure the distances in centimeters from the front speaker and the surround speaker to the listening positioning.
Subtract the surround distance from the front distance and divide by 30. The result is the required Surround Channel delay time in milliseconds.
If the center speaker is in line with the front speaker, no center speaker delay is needed. If, however, it is nearer the listening position, measure the distance in centimeters between the front and center speaker planes, and divide by 30. The result is the required Center Channel delay time in milliseconds.

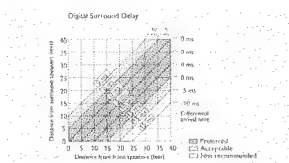

Dismantling Instructions

DISMANTLING INSTRUCTIONS – DVDQ40/50 SERIES
See exploded view for item numbers

Cover 300
-> Remove 4 screws 310 and 3 screws 305
-> Lift cover from rearside to remove

Mounting ↕ Dismounting

Front Assy 0001
-> Open Tray (see instruction below)
-> Unlock Tray front 210
-> Unlock front from frame by releasing successively 4 snaps (2 each on the side and bottom)
-> Place frontassy in front of the set (service position)

DVD module 145
-> Remove front assy (see instruction)
-> Open tray (see instruction below)
-> Remove 4 screws 185 (Module to frame)
-> Lift module forward and remove connections to Mono-board
-> Dismount module

Scart board 1006
(Only for EU model)
-> Remove flex connection to conn 1001 on scart board
-> Remove 2 screws 290 (scart to back-plate)
-> Dismount board

DTS board 1003
-> Remove 2 screws 265 (DTS brackets to back-plate)
-> Flip board over and remove flex connections
-> Dismount board

Power supply unit 1005
-> Remove connections
-> Remove 2 screws 190 (board to frame) and screw 270 (mainsskt to back-plate)
-> Release snaps of 2 spacer 170 (board to frame)
-> Dismount board

Front board 1002A
-> Remove connections
-> Remove 4 screws 110 (board to front)
-> Removes flex connectors to Conn. 1116 and 1117
-> Dismount board

Front board 1002B
-> Remove connections
-> Remove 3 screws 100
-> Removes flex connections to Conn. 1113 and 1119
-> Dismount board

DVD Mono board
-> See also exploded view of DVD module
-> Removes flex connections to turntable motor and sledge motor
-> Remove 4 screws 10 to 13 (Mono-board to VAL6011)
-> Remove carefully flex connection to OPU and wire to the tray motor
-> Dismount board

P-scan board 1007
(Only for DVDQ50 models)
-> Remove connections
-> Remove screw 285 (skt cinch to back-plate) and 2 screws 200 (board to frame)
-> Release snap of spacer 178
-> Dismount board

A/V board 1001
-> Remove DTS board, flip it over and place it on the DVD module
-> Remove flex connections
-> Remove 5 screws 275 (skt cinch ,optical to back-plate) and screw 280 (S-video to back-plate)
-> Release snaps of 2 spacers 175
-> Dismount board

Manually opening of tray

When it is not possible to open the tray with the EJECT button, the tray can manually be opened.
When no disc is loaded, unlock the tray by moving the slide from left to right and pull tray outwards.

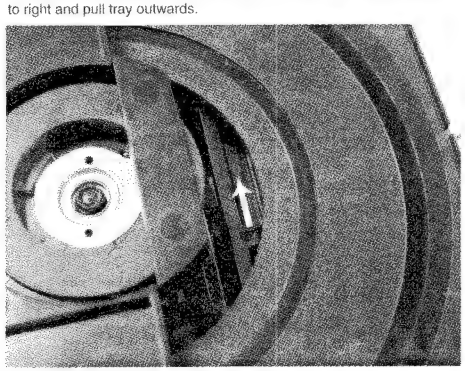

When a disc is loaded, unlock the tray by pushing the slide inwards with a screwdriver and pull tray outwards.

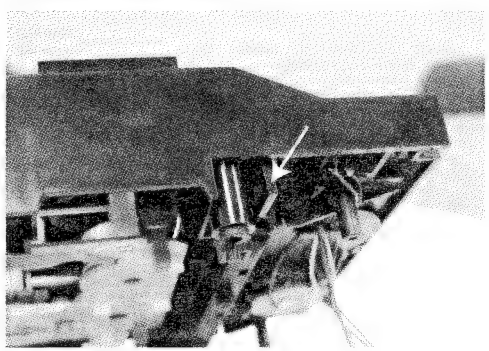

Remove 4 screws to remove loader.

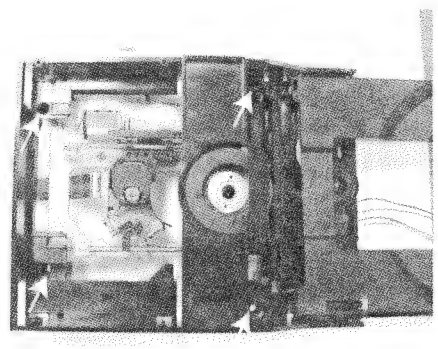

CL 16532062_020.eps
020701

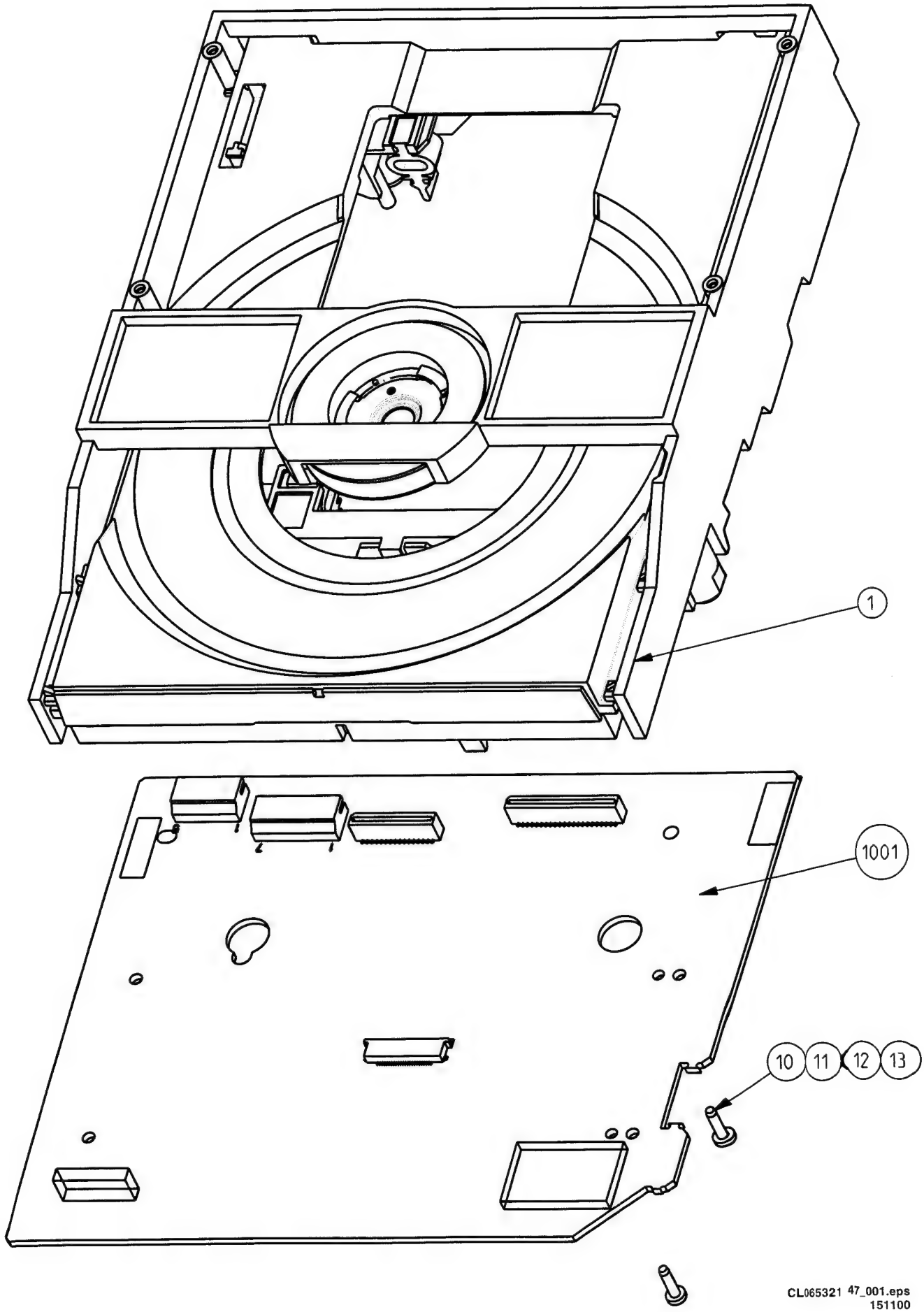

CL065321 47_001.eps
151100

4.2 Exploded Views

4.2.1 DVD Q50

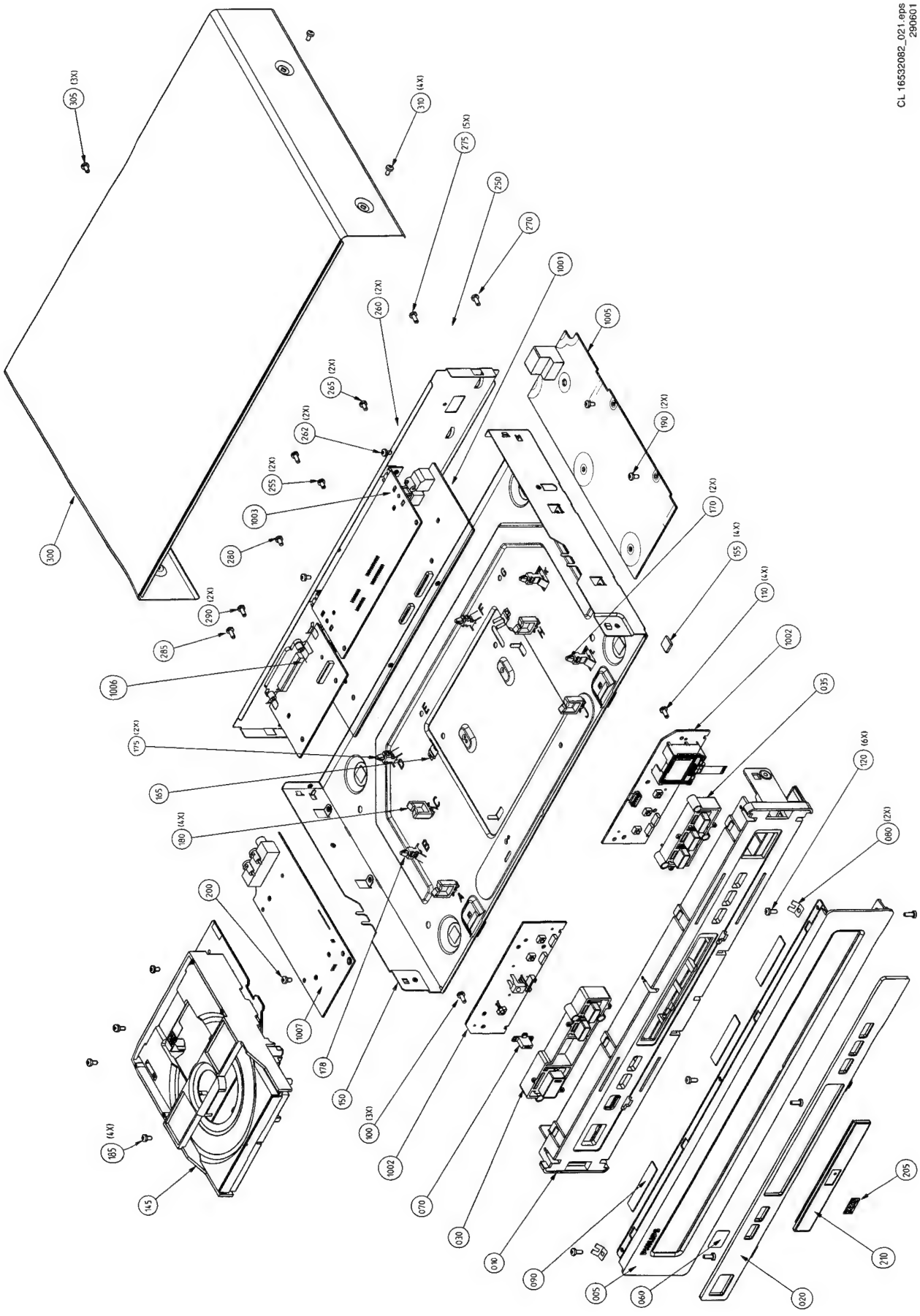

4.2.2 DVD Q40

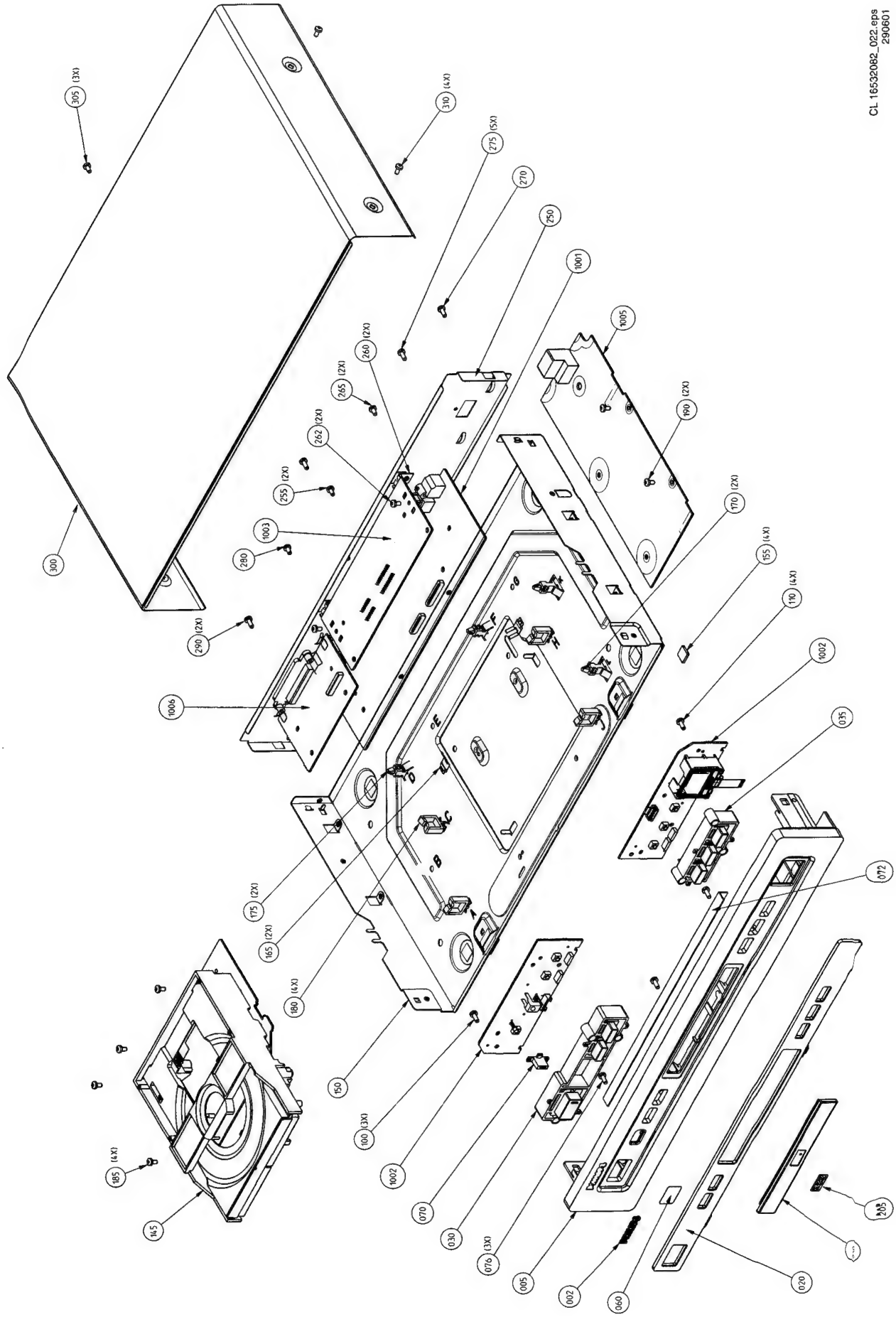
CL 16532062_022.eps
290601
305 (3X)
310 (4X)
275 (5X)
270
250
1001
1005
260 (2X)
265 (2X)
262 (2X)
255 (2X)
1003
280
300
290 (2X)
1006
190 (2X)
170 (2X)
155 (4X)
110 (4X)
1002
035
072
175 (2X)
165 (2X)
180 (4X)
150
100 (3X)
1002
070
030
076 (3X)
005
002
060
020
205
185 (4X)
145

4.3 Service Position

See figure 4-1 for the service position

1. Remove the cables from the cable tie housing.

2. Remove 4 screws that mount the DVD module to the bottom frame.

3. Move the DVD module backward slightly and flip the module over, so that the component side of the board faces upwards, and the module is in the service position.

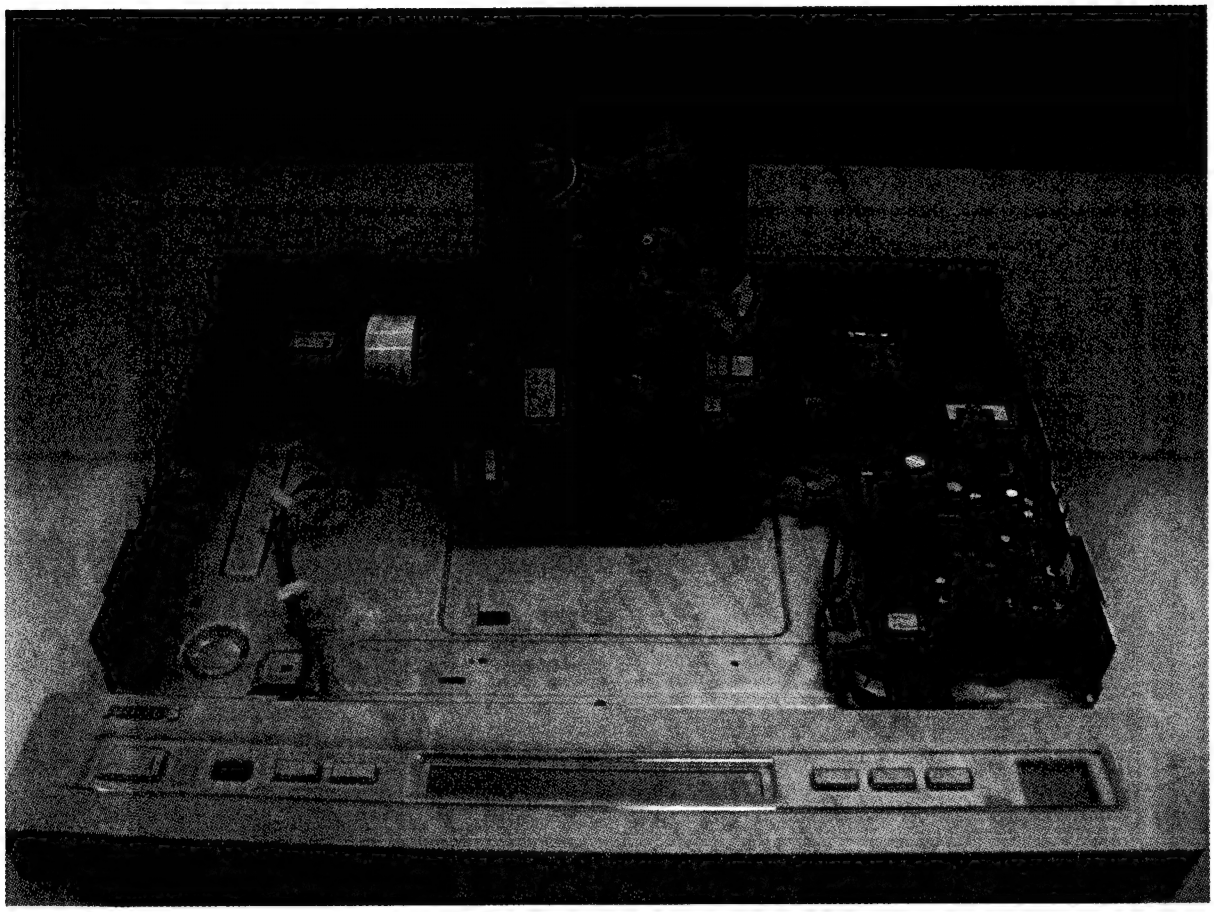

Figure 4-1

5. Diagnostic Software Descriptions And Troubleshooting

5.1 Dealerscript

5.1.1 Purpose of Dealer Script

The dealer script can give a diagnosis on a standalone DVD player; no other equipment is needed to perform a number of hardware tests to check if the DVD player is faulty. The diagnosis is simply a "error" or "pass" message; no indication is given of faulty hardware modules. Only tests within the scope of the diagnostic software will be executed hence only faults within this scope can be detected.

5.1.2 Contents of Dealer Script

The dealer script executes all diagnostic nuclei that do not need any user interaction and are meaningful on a standalone DVD player.
The nuclei called in the dealer script are the following (the number after each nucleus name corresponds with the number being on the local display when the nucleus is executed during the dealer script):

Nucleus		Description
PapChksFl	6	Calculate and verify checksum of FLASH memory.
PapI2cDisp	5	Checks the I2C interface with the slave processor on the display PCB.
PapS2bEcho	4	Checks the I2C interface to the basic engine.
PapI2cNvram	3	Checks the I2C interface with the NVRAM.
PapNvramWrR	2	Pattern test of all locations in the NVRAM
CompSdramWrR	1	Pattern test of all locations in the SDRAM(s).

CL'6532082_024.eps
290600

Figure 5-1

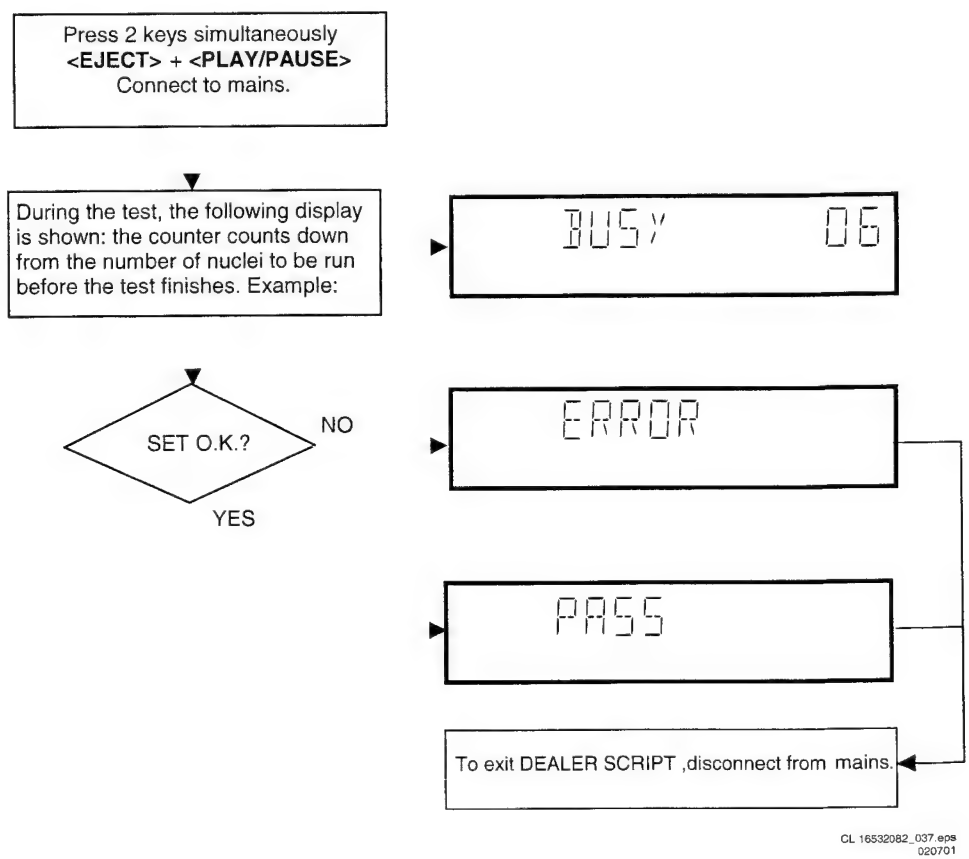

CL 16532082_037.eps
020701

Figure 5-2

5.2 Player Script

5.2.1 Purpose Of Player Script

The Player script will give the opportunity to perform a test that will determine which of the DVD player's modules are faulty, to read the error log and error bits and to perform an endurance loop test. To successfully perform the tests, the DVD player must be connected to a tv set to check the output of a number of nuclei. For DVDv2b a multi-channel amplifier, a set of 6 boxes and an external video source are necessary to test. To be able to check results of certain nuclei, the player script expects some interaction of the user (i.e. to approve a test picture or a test sound). Some nuclei (e.g. nuclei that test functionality of the Basic Engine module) require that the DVD player itself is opened, to enable the user to observe moving parts and approve their movement visually. Only tests within the scope of the diagnostic software will be executed hence only faults within this scope can be detected.

5.2.2 Contents Of Player Script

The player script contains all nuclei that are useful on a DVD player that is connected to a tv-set and help to determine which module of the DVD player is faulty, as well as to read out the contents of the error logs.

5.2.3 Structure Of Player Script

The player script consists of a set of nuclei testing the three hardware modules in the DVD player: the Display PWB, the Digital PWB and the Basic Engine.
Nuclei run by the player test need some user interaction; in the next paragraph this interaction is described. The player test is done in two phases:

1. Interactive tests: this part of the player test depends strongly on user interaction and input to determine nucleus results and to progress through the full test. Reading the error log and error bits information can be useful to determine any errors that occurred recently during normal operation of the DVD player.
2. The loop test will loop through the list of nuclei indefinitely, till the player is reset. The list of nuclei is as follows:
   - VideoScartSwComm
   - PapChksFlash
   - Papl2cNvram
   - CompSdramWrR
   - PapS2bEcho
   - Papl2cDisp

For DSW version 1.6 and above. the DSW version number will be displayed on the local display. Press PLAY/PAUSE to continue to the display test.
The display should look like the following:

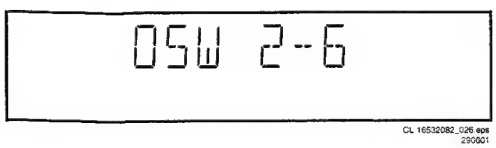

Figure 5-3

5.2.4 Survey

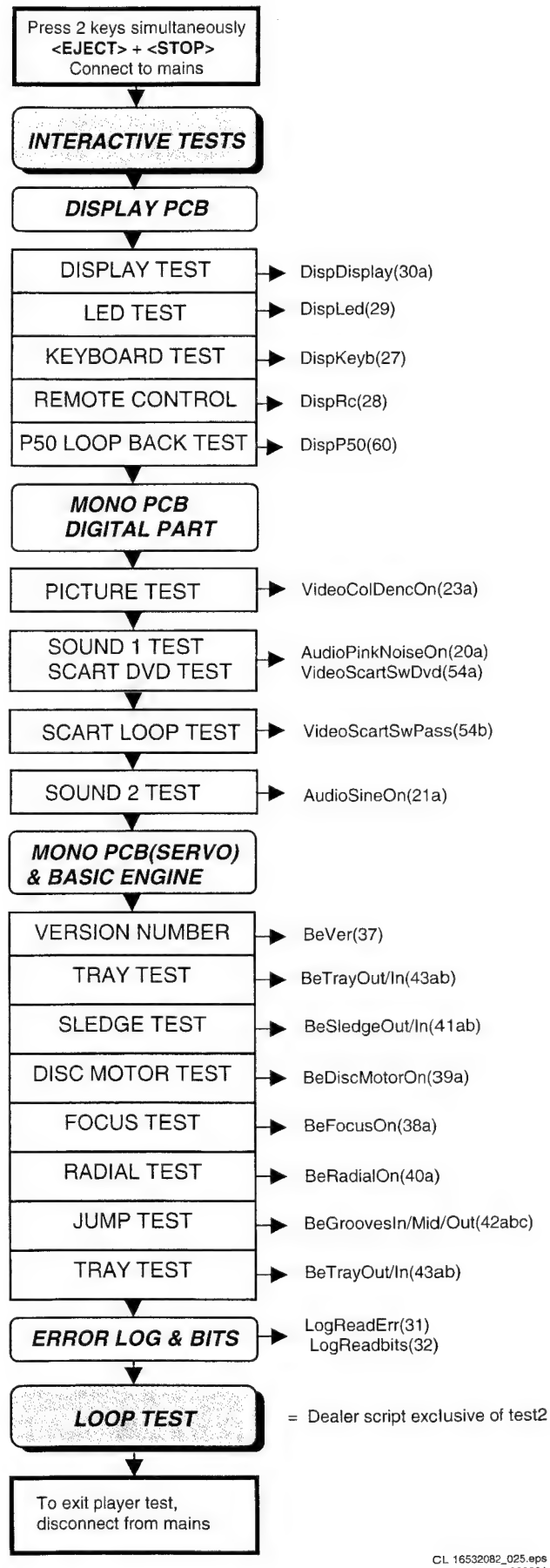

Figure 5-4

5.3 Display PCB

5.3.1 Display Test

The display test is performed by nucleus DispLCDisplay. By putting a series of test patterns on the local display, the local display is tested. To step through all different patterns, the user must either press EJECT (pattern is ok) or STOP (pattern was incorrect) to proceed to the next pattern. The display of patterns is continued in a cyclic manner, shown in Fig. 5-5, until the user presses PLAY/PAUSE. If the user presses PLAY/PAUSE before all display patterns are tested, the DispLCDisplay nucleus will return FALSE (display test unsuccessful).

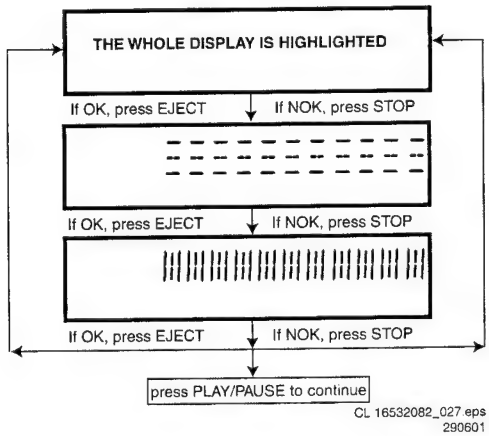

Figure 5-5

LCD Displays Backlight Test

The setting of the backlight brightness of the LCD display can be performed by the nucleus DispLCDBklight. To step through the 3 different brightness levels, the user either press EJECT (display is OK) or STOP (display is incorrect) to proceed to the next display. The display of the brightness levels is continued in a cyclic manner until the user presses PLAY/PAUSE. The brightness pattern is accompanied by a text on the LCD display to indicate its' current brightness level.

If the user presses PLAY/PAUSE before all display patterns are tested, the DispLCDBklight nucleus will return FALSE (diplay test unsuccessful)

5.3.2 LED Test

The LED(s) on the DVD player is (are) tested by nucleus DispLed. The user must check if the LED(s) is (are) lighted; if it is, press EJECT, if it is not, press STOP. By pressing PLAY/PAUSE the script will proceed to the next test. If the user presses PLAY/PAUSE before EJECT or STOP, the DispLed nucleus will return TRUE (LED test successful).

5.3.3 Keyboard Test

The keyboard of the DVD player is tested by nucleus DispKeyb. The user is expected to press all keys on the local keyboard once. The code of the key pressed is shown on the local display (1 hexadecimal digit) immediately followed by a (hexadecimal) number indicating how many times that key has been pressed. Example of the local display during this test:

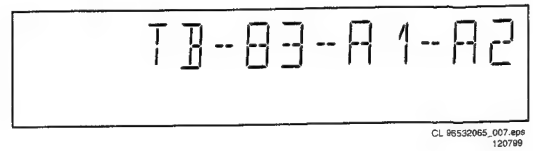

Figure 5-6

The key-codes displayed on the local display will scroll from right to left when the display gets full, the text "tb-" will remain on display.

key id.	key
0	PLAY
1	NEXT
2	PREVIOUS
4	STOP
5	EJECT
J	STANDBY

CL16532082_028.eps
020701

Figure 5-7

If any keys are detected more than once (due to hardware error), the key-code is displayed twice (or more), with the second digit increased by 1.

If the user does not press all keys minimally once (in any order), the DispKeys nucleus will return FALSEand cause an error in the overall result of the player script.

The user can leave the keyboard test by pressing the PLAY/PAUSE key on the local display of the DVD player for at least one full second.

The result of the keyboard test is shown on local display as follows:

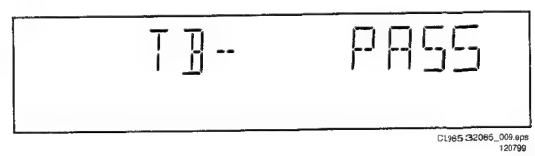

Figure 5-8

Or

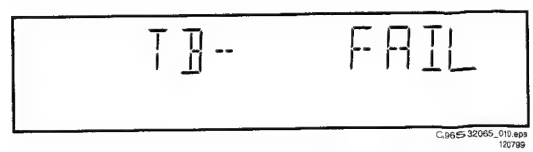

Figure 5-9

Pressing PLAY/PAUSE on the local keyboard again will proceed to the next text.

5.3.4 Remote Control Test

The remote control of the DVD player is tested by nucleus DispRc. The user must press any key on the remote control just once. The codes of the key pressed will be shown on the local display in hexadecimal format. Example:

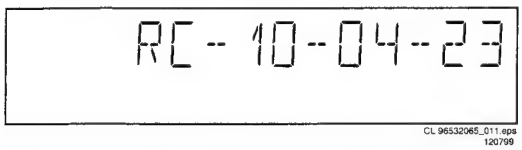

CL 96532065_011.eps 120799

Figure 5-10

In this example 23 is the hexidecimal code of the pressed RC key. The user can leave the remote-control test by pressing PLAY/PAUSE on the local keyboard of the DVD player. The remote control test is successful if a code was received before the user pressed the PLAY/PAUSE key; pressing the PLAY/PAUSE key before pressing a key on the remote control gives an error in the remote control test (note that the remote control test will also fail if a key on the remote control was pressed but no code was received). The remote control test does not check upon the contents of the received code, that is it will not be checked if the received code matches the key pressed. If desired, the user can manually check this code by using a code-table for the remote control key-codes.

C Key id	Hexadecimal code
STANDBY	0C
STOP	31
PLAY	2C
PLAY BACKWARD	2D
PAUSE	30
STEP FORWARD	F6
STEP BACKWARD	F5
FORWARD	28
FORWARD 4X	DF
FORWARD 8X	E0
BACKWARD	29
BACKWARD 4X	DE
BACKWARD 8X	DD
SLOW	22
SLOW 2	D9
SLOW BACKWARD	23
SLOW BACKWARD 2	DA
NEXT	20
PREVIOUS	21
CURSOR UP	58
CURSOR DOWN	59
CURSOR LEFT	5A
CURSOR RIGHT	5B
OK	5C
0	0
1	1
2	2
3	3
4	4
5	5
6	6
7	7
8	8
9	9
TOGGLE	C8
ANGLE	85
AUDIO	4E
SUBTITLES	4B
SUBTITLE ON/OFF	E3
ROOT MENU	54
TITLE MENU	71
MENU	D1
SETUP MENU	82
OSD ON/OFF	F
RETURN	83
RESUME	D7
SCAN	2A
SHUFFLE	1C
REPEAT	1D
A/B REPEAT	3B
TOGGLE SCART	43
OPEN/CLOSE	42
FTS	FB
KARAOKE	E4
OPTION	FA

CL06532096_003.eps 050700

Figure 5-11

After pressing PLAY/PAUSE, the result of the remote control test is displayed on the local display of the DVD player as follows:

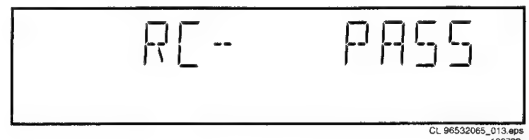

CL 96532065_013.eps 120799

Figure 5-12

Or

CL 96532065_014.eps 120799

Figure 5-13

Pressing PLAY/PAUSE on the local keyboard again will proceed to the next test.

5.3.5 P50 Loop-Back Test

For the P50 loop-back test, the user must first press a key to decide if the test is to be performed.
The display will show the following message:

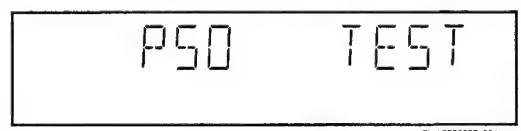

CL 16532007_004.eps 010201

Figure 5-14

If the user presses STOP, the P50 test will be skipped.
If the user presses EJECT, the P50 test is performed and the result is displayed as follows:

Test successfull:

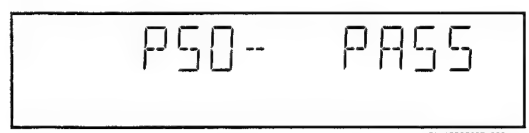

CL 16532007_005.eps 010201

Figure 5-15

Test fails:

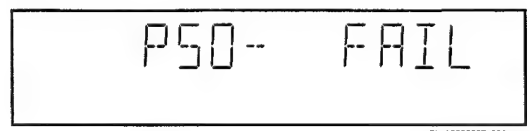

CL 16532007_006.eps 010201

Figure 5-16

Press the PLAY/PAUSE key to continue to the next text

5.4 Mono PCB Digital Part

5.4.1 Picture Test

The picture test is performed by putting a predefined picture (colour bar) on the display (nucleus VideoColDencOn) and asking the user for confirmation. The display will show the following message:

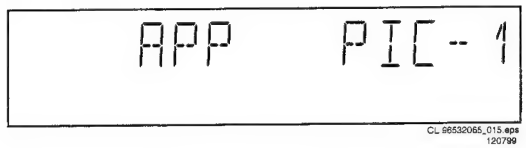

Figure 5-17

By pressing EJECT the user confirms the test, pressing STOP will indicate the picture was invisible or incorrect. Pressing PLAY/PAUSE will proceed to the next test

5.4.2 Sound 1 & SCART DVD Test

The first soundtest is performed by starting a pink noise sound that needs confirmation from the user (nucleus AudioPinkNoiseOn); the display will show the following message very shortly:

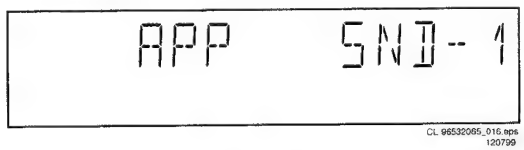

Figure 5-18

After starting up sound 1, SCART loop-trough will be simultaneously active during this test. SCART loop-trough will be measured with the aid of an external video source. When entering the SCART loop-trough, the local display indicates:

Figure 5-19

On the TV screen a colour bar (generated by nucleus VideoColDencOn) is visual and the internally generated pinknoise is audible. By pressing EJECT the user confirms the test, pressing STOP will indicate the sound was inaudible or incorrect. Pressing PLAY/PAUSE will proceed to the next test; if the user presses PLAY/PAUSE without pressing EJECT or STOP first, the result of this test will be TRUE (sound ok). By pressing the PLAY/PAUSE button there will be switched over to the external source, this must become now visible on the TV screen (using the SCART). The local display indicates:

Figure 5-20

The internally generated colour bar is still available on the CVBS and Y/C outputs. And the pinknoise-signal is still available on the cinch audio outputs. By pressing the EJECT button, the internal generated colour bar becomes visual again.
The test can be exited by pressing the PLAY/PAUSE key for more than one second.

5.4.3 Sound 2 Test

The second sound test is performed by producing a sine audio output (nucleus AudioSineOn). The signal can be stopped by pressing the STOP-key. The display will show the following message:

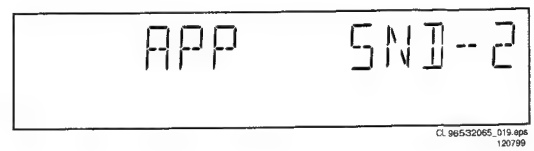

Figure 5-21

By pressing EJECT the user confirms the test, pressing STOP will indicate that something went wrong. Pressing PLAY/PAUSE will proceed to the next; if the user presses PLAY/PAUSE without pressing EJECT or STOP first, the result of this test will be TRUE (sound ok).

5.5 Basic Engine

5.5.1 Version Number

In the basic engine tests, the version number of the Basic Engine will be shown first, as the following example:

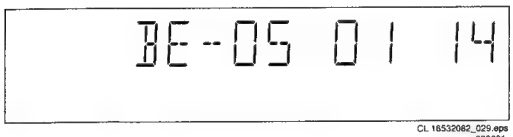

CL 16532062_029.eps
290601

Figure 5-22

By pressing the PLAY/PAUSE key, the Basic Engine tests are started.

5.5.2 Tray Test

First, the tray is tested. The purpose of this test is also to give the user the opportunity to put a disc in the tray of the DVD player. Some tests on the Basic Engine require that a disc(e.g. DVD MPTD test disc) is present in the player. At the end of the Basic Engine tests this tray test will be repeated solely to enable the user to remove the disc in the tray. The local display will look as follows:

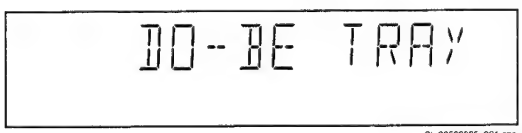

CL 96532065_021.eps
120799

Figure 5-23

By pressing EJECT or STOP the user can toggle the position of the tray. Note that this test will not contribute to the test result of the Basic Engine. Pressing PLAY/PAUSE will proceed to the next test, after the tray has been closed (by the software) if it was open.

5.5.3 Sledge Test (Visual Test)

The second Basic Engine test tests the sledge; the user can move the sledge as many times as desired by using EJECT (nucleus BeSledgeOut) and STOP (nucleus BeSledgeIn). Pressing PLAY/PAUSE on the local keyboard proceeds to the next test. Note that this test will not contribute to the test result of the Basic Engine. The local display will look as follows during the sledge test:

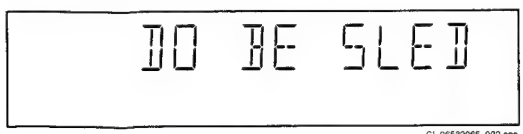

CL 96532065_022.eps
120799

Figure 5-24

5.5.4 Disc Motor Test (Visual Test)

The third Basic Engine test tests the disc motor (nucleus BeDiscMotorOn); the local display looks as follows:

CL 96532065_023.eps
120799

Figure 5-25

By pressing EJECT the user confirms that the disc motor is running; pressing STOP indicates the disc motor does not work. Pressing PLAY/PAUSE proceeds to the next test, after a reset of the disc motor (nucleus BeDiscMotorOff). If the user presses PLAY/PAUSE before pressing EJECT or STOP, the result of this test will be TRUE (disc motor is running).

5.5.5 Focus Test (Visual Test)

The fourth Basic Engine test tests the focussing; first focussing is turned on by calling nucleus BeFocusOn. The display will look as follows:

CL 96532065_024.eps
120799

Figure 5-26

By pressing EJECT the user confirms that the focussing was succesful; pressing STOP indicates a focussing failure. Pressing PLAY/PAUSE proceeds to the next test after a reset of the focussing (nucleus BeFocusOff); if PLAY/PAUSE is pressed before EJECT or STOP, the result of this test will be TRUE (focus successful).

5.5.6 Radial Test (Visual & Listening Test)

The fifth Basic Engine test tests the radial functionality (nucleus BeRadialOn); the local display looks as follows:

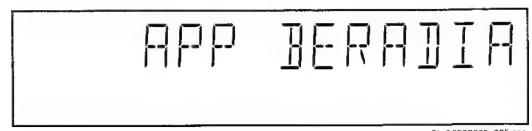

CL 96532065_025.eps
120799

Figure 5-27

By pressing EJECT the user confirms that the radial function worked; pressing STOP indicates the function does not work. Pressing PLAY/PAUSE proceeds to the next test, after a reset of the radial (nucleus BeRadialOff). If the user presses PLAY/PAUSE before pressing EJECT or STOP, the result of this test will be TRUE (radial successful).

5.5.7 Jump Test (Listening Test)

The sixth and last Basic Engine test tests the jumping by calling nuclei BeGroovesIn, BeGroovesMid and BeGroovesOut. During this test, the local display looks as follows:

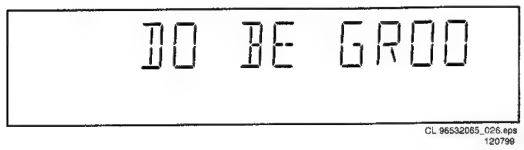

Figure 5-28

The user can switch between the three different types of groove settings by pressing EJECT (forward to next nucleus in the list In-Mid-Out) or STOP (backward in the list In-Mid-Out). This is done in a cyclic manner; note that this test will not contribute to the test result of the Basic Engine. Pressing PLAY/PAUSE proceeds to the next test, after the disc motor has been shut off with a call to nucleus BeDiscMotorOff.

5.5.8 Tray Test

As a last action for the Basic Engine tests, the tray test is repeated. The local display will look as follows:

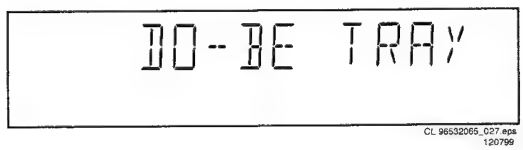

Figure 5-29

This test is meant to give the user the opportunity to remove the disc in the tray. The tray position can be toggled using the EJECT and STOP key. The tray will be closed (by the software, if it is open) before proceeding to the next test when the user presses the PLAY/PAUSE key.

5.5.9 Error Log (See Table On the Next Page)

Reading the error log and error bits information can be useful to determine any errors that occurred recently during normal operation of the DVD player. Reading the error log is done by nucleus LogReadErr. The display during the errorlog readout looks as follows :

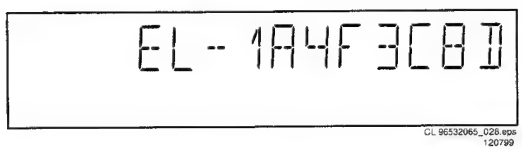

Figure 5-30

By pressing EJECT or STOP the user can move forward or backward (respectively) through the logged error codes. The highlighted number indicates which errorcode is currently on display (in the example above, errorcode number 4 is displayed). If "0000" is displayed at all positions, the error log is empty. Display of the logged errors is done in a cyclic manner. The errorcode with the lowest highlighted number is the most recent. By pressing PLAY/PAUSE on the local keyboard, the user can proceed to the next test.

5.5.10 Error Bits (See Table On the next page)

Reading the error bits is done by nucleus LogReadBits. The display during the errorbits readout looks as follows:

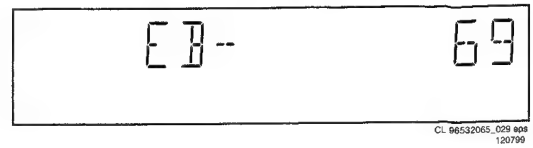

Figure 5-31

Only the set errorbits will be shown by their (decimal) number. Refer to the appropriate documentation for the explanation of each bit number. If the display only shows "EB-0", no error bits were set. By pressing PLAY/PAUSE the user can continue to the next test.

5.6 Loop Test (See Table Below)

At the start of the loop test, the display will show the result of the interactive player test:

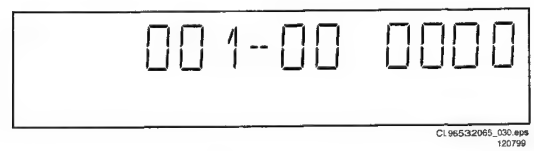

Figure 5-32

The left side of the display contains a 3-digit code, which can have a value between 000 and 111. These values are to be interpreted as follows:

Displayed Value	Indication for each module		
	Basic Engine	Mono PCB	Display PCB
000	ok	ok	ok
001	ok	ok	faulty
010	ok	faulty	ok
011	ok	faulty	faulty
100	faulty	ok	ok
101	faulty	ok	faulty
110	faulty	faulty	ok
111	faulty	faulty	faulty

Figure 5-33

The loop test will perform the same nuclei as the dealer test, but it will loop through the list of nuclei indefinitely. The display of the DVD player will display not only the three digits indicating correct/faulty modules and the last found error code (as mentioned, faults are detected as far as they can be within the scope of the diagnostic software), but also a loop counter indicating how many times the loop has been gone through. Example:

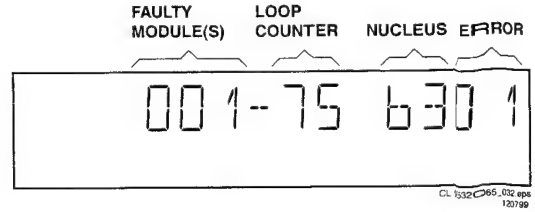

Figure 5-34

The number after the hyphen indicates the number of times the loop test has been performed; the 4 digits at the right side of the display show the last error that was found when running the loop test: the leftmost two digits of this code

indicate which nucleus resulted in a fault; the rightmost two digits refer to the faultcode within that nucleus. For further explanation of this error code, see list of error codes below.

ERROR CODES LOOP TEST

ERROR CODE	NUCLEUS NUMBER	ERROR DESCRIPTION
0601	6	Calculated checksum of FLASH is not correct
1101	11	I2C bus busy before start
1102		NVRAM access time-out
1103		No NVRAM Acknowledge
1104		NVRAM reply time-out
1201	12	I2C bus busy
1202		I2C bus not working
1203		Slave controller not responding
1204		Slave response is not correct
1301	13	Parity error from basic engine to serial
1302		Parity error from serial to basic engine
1303		No communication between serial and basic engine
1304		Communication time-out error
1601	16	The SDRAM is faulty
5201	52	I2C bus busy
5202		Error sending I2C command to COLOR SETUP IC
5203		Colour setup IC not responding
5204		Colour setup IC response is not correct
5401	54	I2C bus busy
5402		Error sending I2C command to SCART SWITCH IC
5403		SCART Switch is not responding
5403		SCART Switch response is not correct

CL06532096_006.eps
050700

Figure 5-35

Error log / bits table	**Read ERROR LOG in player script**	**Read ERROR BITS in player script**
Basic engine errors	Value:	Value:
Command to the Basic Engine not allowed in this state or unknown command	150101	8
Parameter(s) from the command to the Basic Engine is not valid	150102	7
Sledge could not be moved to the inner home position	150103	6
Focus failure	150104	5
Turntable motor speed could not be reached within timeout	150105	4
Radial servo could not get on track on the disc	150106	3
PLL could not lock in the accessing or tracking state	150107	2
Subcode or sector information could not be read	150108	1
requested subcode could not be found	150109	16
Tray could not be closed or opened completely	15010A	15
TOC could not be read within timeout	15010B	14
The requested seek on the disc could not be executed	15010C	13
A requested lead-in is not on the disc	15010D	12
A non existing burst cutting area is requested	15010E	11
S2b communication error	1501F0	10
S2b communication error	1501F1	9
S2b communication error	1501F3	24
S2b communication error	1501F4	23
S2b communication error	1501F5	22
Digital PWB errors		
Communication error with the Sti 5505	90000	32
Communication error with the Sti 5505	90001	31
Disply processor errors		
Communication error with the display processor	190000	40

5.6.1 Servicing DVD Loader

The DVD Loader / mechanism, VAL6011, has to be exchanged completely in case of failure. A new mechanism can be ordered with codenumber 9305 023 61101.

5.6.2 Reprogramming Of New Mono Boards.

Caution

This information is confidential and may not be distributed. Only a qualified service person should reprogram the mono board.

After reset of NV-memory or repair of the mono board, all the customer settings and also the region code will be lost.
Reprogramming of the mono board will put the player back in the state in which it has left the factory, i.e. with the default settings and the allowed region code.
Reprogramming is limited to 25 times
When the counter reaches 25, reprogramming is not possible anymore
Reprogramming will be done by way of the remote control.
Put the player in stop mode, no disc loaded.
Press the following keys on the remote control:
<***PLAY***> followed by numerical keys ***<1> <5> <9>***
The display shows: "- - - - - - - - - -"
Press now successively the following keys :

for DVDQ40 /001 /021 /051 : ***<0><6><1> <0><0><0><0><0><0><0><0><0>***
for DVDQ50 /001 /021 /051 : ***<0><6><8> <0><0><0><0><0><0><0><0><0>***

Press <***PLAY***> again.
The TV screen will become BLUE during a short time to confirm that the mono board has been reprogrammed.

CL 16532082_030.eps
290601

Figure 5-36

5.6.3 Reset Of Virgin Mode

After the player has been powered up for test by the dealer, it would have gone through the Virgin Mode. It is possible to reset the settings made during that mode before the delivery of player to the customer. This can be done as shown in the following diagram:

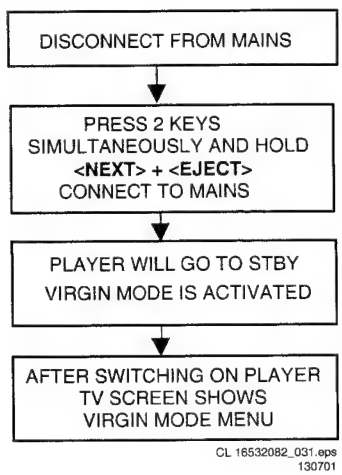

CL 16532082_031.eps
130701

Figure 5-37

TRADE MODE

When the player is in Trade Mode, the player cannot be controlled by means of the front key buttons, but only by means of the remote control.

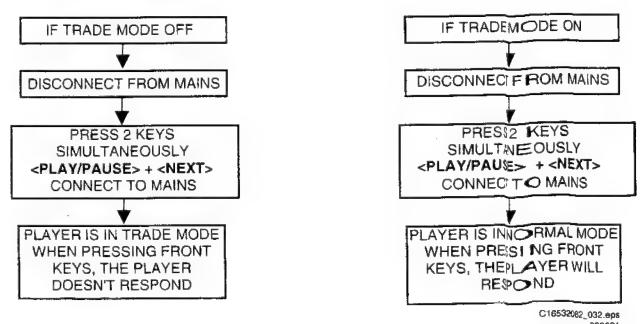

C16532082_032.eps
290601

Figure 5-38

5.7 Test Instruction Audio/Video Board

These test instructions can be used for all versions of the A/V board which has the following outputs:

- Audio L/R
- 5.1 Audio output
- Subwoofer output
- Optical / Coaxial digital output
- CVBS
- Y/G_vid,U/B_vid,V/R_vid output
- S-video
- Scart output

5.7.1 General

- All the waveforms measurement carried out in these test instruction will be base on the testpoint indicated in the A/V board schematic diagram in the Service manual.
- Impedance of the measuring-equipment should be > 1MΩ
- Most of the tests can be done using either the Diagnostic software " Player script" which can be found in the chapter "Diagnostic Software description and troubleshooting" or the Menu interface using the Service PC with a terminal emulation program (e.g. Window Hyperterminal) where it is possible to control the execution of the Diagnostic Nuclei
- Setup for the measurement will be done in set level with all modules connected as shown in the Wiring Block diagram.

5.7.2 General Start-Up Measurement

Supply check:

Before starting the measurement,ensure that all power supply are connected to the A/V board.

Pin nbr	Supply
1101-9	-5V (-Vcc)
1101-10	+5V
1101-11	+5V

The supply currents can be measured using a Tektronics AM503B current probe or equivalent.

Supply	Power consumption (AVG)
+5VA	+5V 3% I = 200mA
+5Vvid	+5V 3% I = 200mA
-5V	-5V 3% I = 200mA

Clock Check

Ensure the present of the clock to the DAC

Clock Name	Testpoint	Frequency
PCM_CLK	TP10	11.2896MHz 0.02% tolerance

Audio mute check

Measure the Audio mute voltage input at pin 12 of connector 1101

Status	Value
AudioMuteOn	4.7V 10%
AudioMuteOff	-8V 10%

To toggle between ON and OFF,use the following commands:

Ref.#	Command Name	Remarks
19a	AudioMuteOn	Audio Mute On
19b	AudioMuteOff	Audio Mute Off

5.7.3 Audio DAC And Amplifier

Ensure that the Audio mute signal is OFF

To check the DAC and buffer amplifier,send the following commands:

Ref.#	Command Name	Remarks	Audio output
21a	AudioSineOn	Audio Sine signal ON	Sine,1Khz on stereo
----	Press stop button	Audio Sine signal OFF	No waveform
20a	AudioPinkNoiseOn	Audio Pinknoise ON	Pink Noise on 6 channels
20b	AudioPinkNoiseOff	Audio Pinknoise OFF	No waveform

The audio signal (sine or pink noise) will also be present on the digital output (SPDIF).This can be checked by connecting digital signal to an amplifier with digital input.

Check the I2S and audio signal at the following testpoints:

Name	Testpoint
LRCLK	TP8
SCLK	TP9
PCM_CLK	P10
PCM_OUT0	TP7
PCM_OUT1	TP27
PCM_OUT2	TP28
SPDIF	TP11
Front L/R out-Audio cinch	TP13
H/P L/R out	TP20
Analog out -Audio cinch	TP25

All waveforms can be refer to the waveform diagram in the chapter "Diagnostic software description and troubleshooting".

5.7.4 Video Output And Buffer Amplifier

Check DC output-level at all video cinch output : 1.0V DC ± 10%

Generate a color bar using the following software commands:

Ref.#	Command Name	Remarks
23a	VideoColDencOn	Colour DENC ON
61a	VideoColOutRGB	RGB Colourbar
61b	VideoColOutYUV	YUV Colourbar
23b	VideoColDencOff	Colourbar DENC OFF

Check the video outputs at the following testpoints:

Name	Testpoint
B_VID	TP1
G_VID	TP2
R_VID	TP3
CVBS out	TP14
S-Video-C out	TP15
S-Video-Y out	TP16
Y out	TP17
U out	TP18
V out	TP19

All waveforms can be refer to the waveform diagram in the chapter "Diagnostic Software description and troubleshooting".

5.7.5 Play And 16/9 Detection

Check DC voltage at S-Video-chroma output (pin 4) with a 6K8 ohm load and Scart connector (pin 8) and change the 0/ 6/12 input (1101-8) using the following commands:

Ref.#	Command Name	Remarks	Chroma output
25a	VideoScartLo	Sends out 0V 0.5V	<0.1V
25b	VideoScartMi	Sends out 6V 10%	2.0V 10% with load
			5.0V 10% without load
25c	VideoScartHi	Sends out 12V 10%	<0.1V

5.7.6 Kill Circuit

To check the functionality of the Kill circuitry,the audio outputs has to be present by the following command:

Ref.#	Command Name	Remarks	Audio output
21a	AudioPinkNoiseOn	Audio Pinknoise ON	Pink Noise on 6 channels

Check the audio outputs at the audio cinch of the A/V board : Pink Noise
Activate the Kill circuit by using the following command:

Ref.#	Command Name	Remarks
19a	AudioMuteOn	Audio Mute On

Check the audio outputs at the audio cinch of the A/V board : No waveform
Switch off the kill circuit by using the following command:

Ref.#	Command Name	Remarks
19b	AudioMuteOff	Audio Mute Off

Check the audio outputs at the audio cinch of the A/V board : Pink Noise

5.8 Test Instructions Display Board

5.8.1 Introduction

These test instructions are written for all versions of the display PCBAS.
The contents of the PCB can be split up into next blocks:

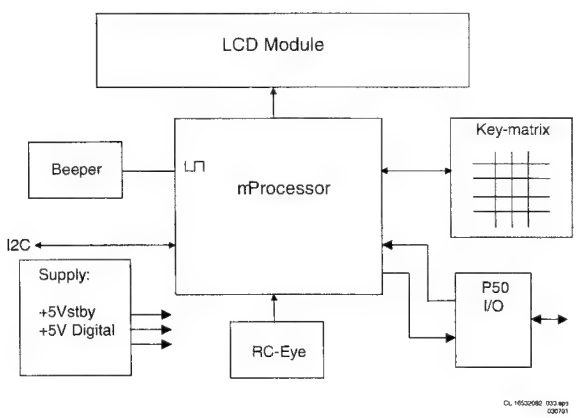

Figure 5-39

5.8.2 Functionality Description:

The essential component of the display PCB is the µP (slave). This slave works on an 8MHz resonator and has a reset circuit that is triggered by the +5Vstby. After the reset pulse, the standby control line will release the reset of the host µP. This host µP will then initialise the slave. In addition, when going to stand-by, the slave will put the host µP in reset. When the slave receives the right IR or key code to leave the standby mode, the reset of the host µP will be released.
Other slave functions is:

- Has inputs for RC (RC5 and RC6) and P50 (P50 controller is built in).

5.8.3 General

- Oscilloscope measurements have been carried out using a Philips PM3392A.
- Impedance of measuring-equipment should be > 1MΩ.
- To do correct measurements we recommend to use supply 3122 427 22930.

5.8.4 Reset

Check next reset timing with an oscilloscope at pin 4 of the microprocessor.

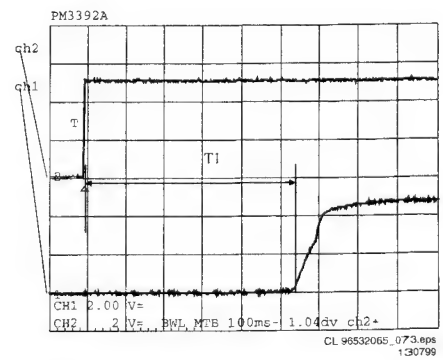

Figure 5-40

Timing: 400msec < T1 > 700msec.
CH1: +5Vstby voltage at power on.
CH2: Voltage at pin 4.

5.8.5 Key-matrix

Connect a extra 10kΩ pull-up to pin 43 en 44 of the µP and check next matrix scanning at these pins.

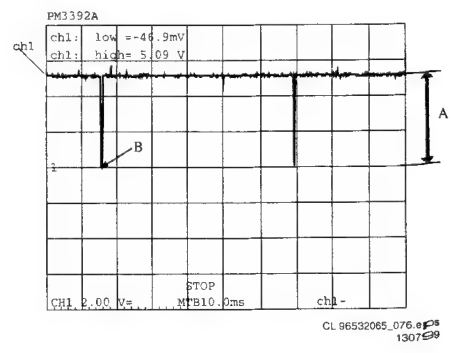

Figure 5-41

Level A: 5.0V +/-7%
Level B: 0V +/-200mV
Check matrix scanning from pin 33 until 44 of the µP.
The results should be the same as the diagram above.

5.8.6 I.R. Receiver

Check at pin 29 of the µP if this line switches from low (< 0.3V) to high (> 4.5V), while pressing a key on a Philips RC5 or RC6 remote control.

5.8.7 Standby LED

In operating mode:
Check the voltage at the base of transistor 7109:
4V +/- 10% (LED is OFF)

In standby mode:
Voltage at anode of LED 6200 is 3V3 +/- 15%
Check to ensure that the LED is ON

5.8.8 P50 Interface

P50 is a bi-directional serial interface, which is used for communication between video equipment. For European sets, this communication goes via pin 10 of the scart-bus. In other regions, it can be a cinch bus at the back of the set.

1. Keep the µP in reset by short-circuiting emitter and collector of transistor 7108, via resistor 3100 and 3104 transistor 7101 is switched on.
2. Check the voltage at the P50 output connector 1118-5: < 200mV.

When the reset is released the µP output-pin becomes low and transistor 7101 is switched off.

1. Check the voltage at the P50 output connector 1118-5: 4V9 +/-5%.
2. Check also the µP P50 input (µP pin 20): 5V +/-5%.
3. Connect the P50 line (connector 1118-5) to ground.
4. Check again the µP P50 input (µP pin 20): <0V3.

6. Block and Wiring Diagram.

Blockdiagram DVD Q40-50 /0X1

GENERAL BLOCK DIAGRAM DVDQ40/50-EU

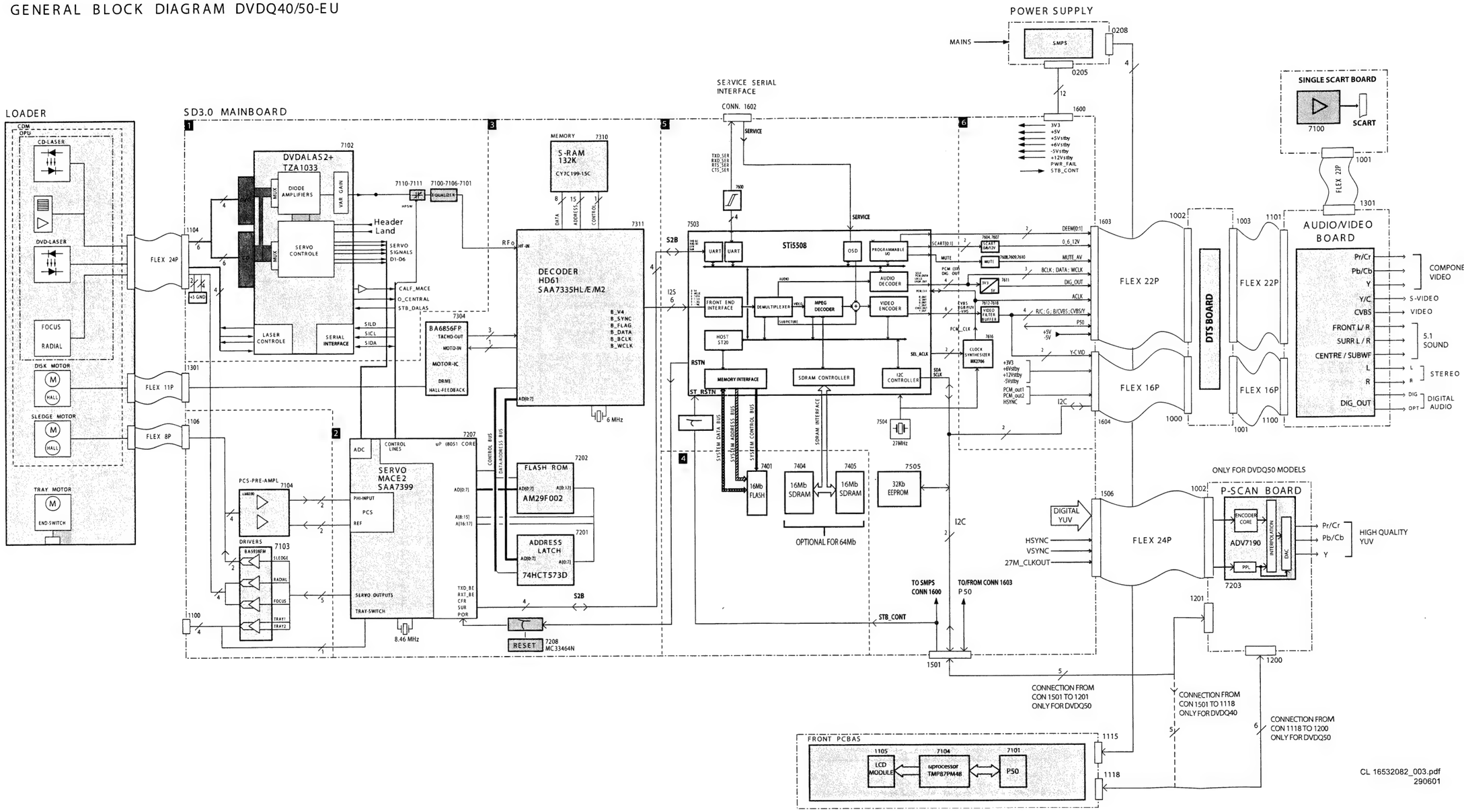

CL 16532082_003.pdf
290601

Wiring Diagram

D1 : DVD STEP 2001
(DVD Q40/Q50)
WIRING / BLOCK DIAGRAM

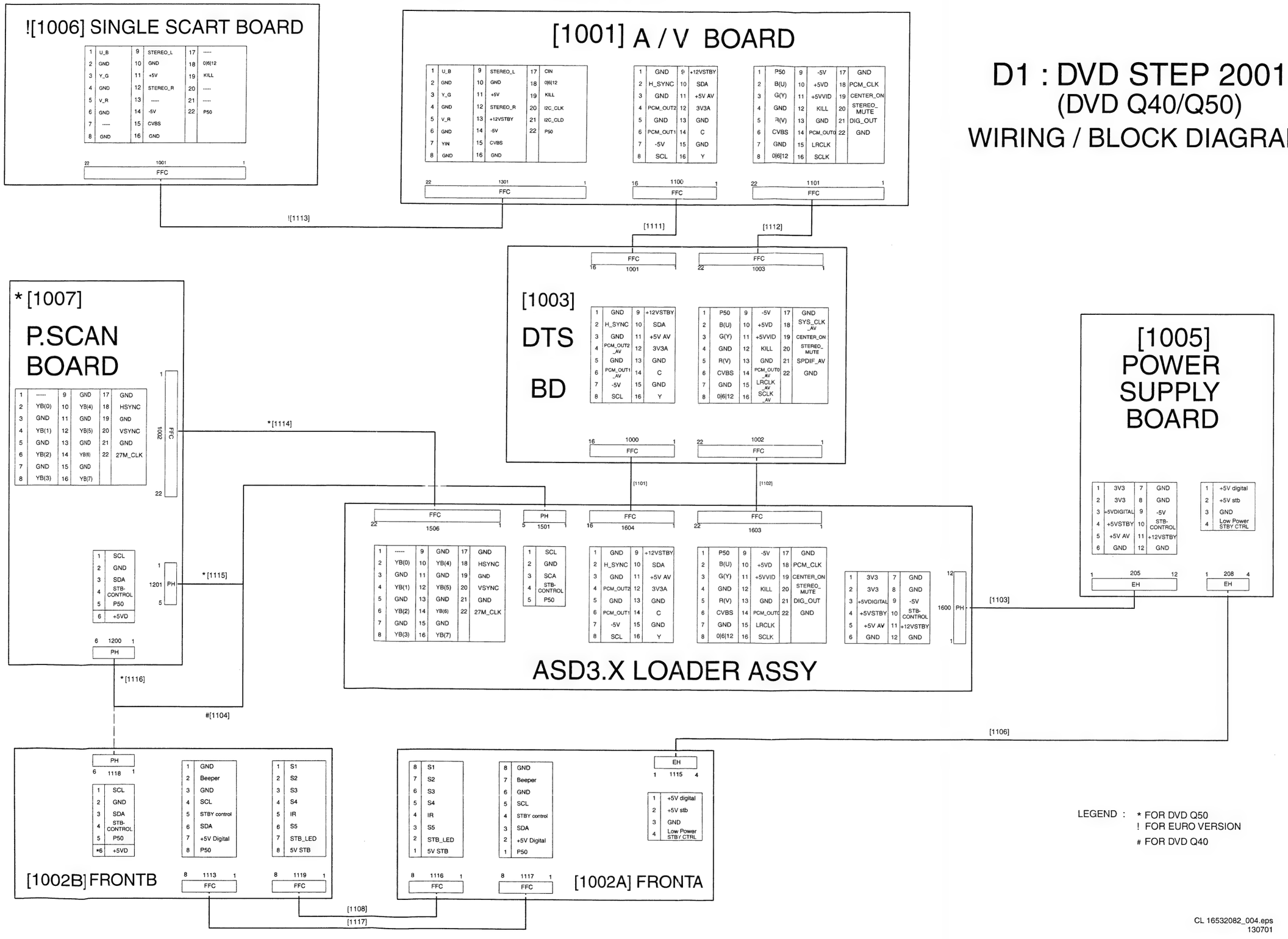

LEGEND : * FOR DVD Q50
! FOR EURO VERSION
FOR DVD Q40

CL 16532082_004.eps
130701

7. Electrical Diagrams And Print-Layouts

Power Supply Unit STEP 2001 EURO

0011 B4 0021 A9 0101 B1 0102 A1 0199 C3 0205 C11 0206 A11 0208 B11
0299 F11 1120 A2 1121 A3 1122 B3 2102 D4 2106 A2 2107 G2 2108 E5
2109 B5 2110 G5 2111 A5 2113 F5 2121 B5 2122 A5 2127 C5 2130 B3
2131 A6 2201 E6 2202 F6 2203 F7 2211 A9 2212 A10 2220 A7
2221 B9 2222 A7 2223 B9 2225 A8 2230 D10 2231 D10 2240 E8 2241 E10
2242 E10 2250 F8 2252 F7 2260 C7 2261 B10 2262 B7 2263 B10
2264 C8 2265 C9 2299 G11 3102 D5 3103 E5 3104 C4 3105 B4
3106 A3 3108 E2 3111 A5 3112 E5 3113 E5 3114 E4 3115 E4 3116 E2
3120 A2 3121 A4 3122 A2 3125 C4 3126 C4 3127 C5 3128 C5 3130 B3
3201 E7 3202 F7 3203 G6 3204 F7 3205 G7 3206 G7 3207 E6 3208 F6
3209 E7 3220 B8 3230 B8 3231 D10 3241 E9 3242 E9 3243 E9 3250 B8
3251 F9 3252 G9 3253 F9 3254 G9 3260 B8 3261 C9 3262 C8 3263 C8
3264 B10 3265 C9 3266 C10 3267 B8 3271 F10 3276 F8 5121 A3 5125 B5
5131 A6 5161 A3 5162 B3 5210 A9 5220 A8 5221 A8 5225 A8 5230 D10
5241 D8 5250 F8 5260 B8 6102 D5 6103 C4 6105 C4 6106 F4 6111 B5
6112 B4 6113 B4 6114 A4 6115 A4 6122 A3 6123 A4 6127 C5 6128 C5
6201 E7 6202 E8 6220 A7 6221 A7 6230 D9 6240 D8 6241 E8 6250 F7
6260 B7 6261 B9 6262 C8 6270 F10 6271 F10 6280 D9 7101 E3
7102 E6 7125 B5 7201 F6 7204 C9 7221 A8 7231 D10 7240 D9
7241 E9 7249 D10 7250 F9 7263 C8 7264 B8 9115 E4 9122 A2
9161 A3 9162 B3 9222 C3 9241 E8 9250 F9 9251 B9

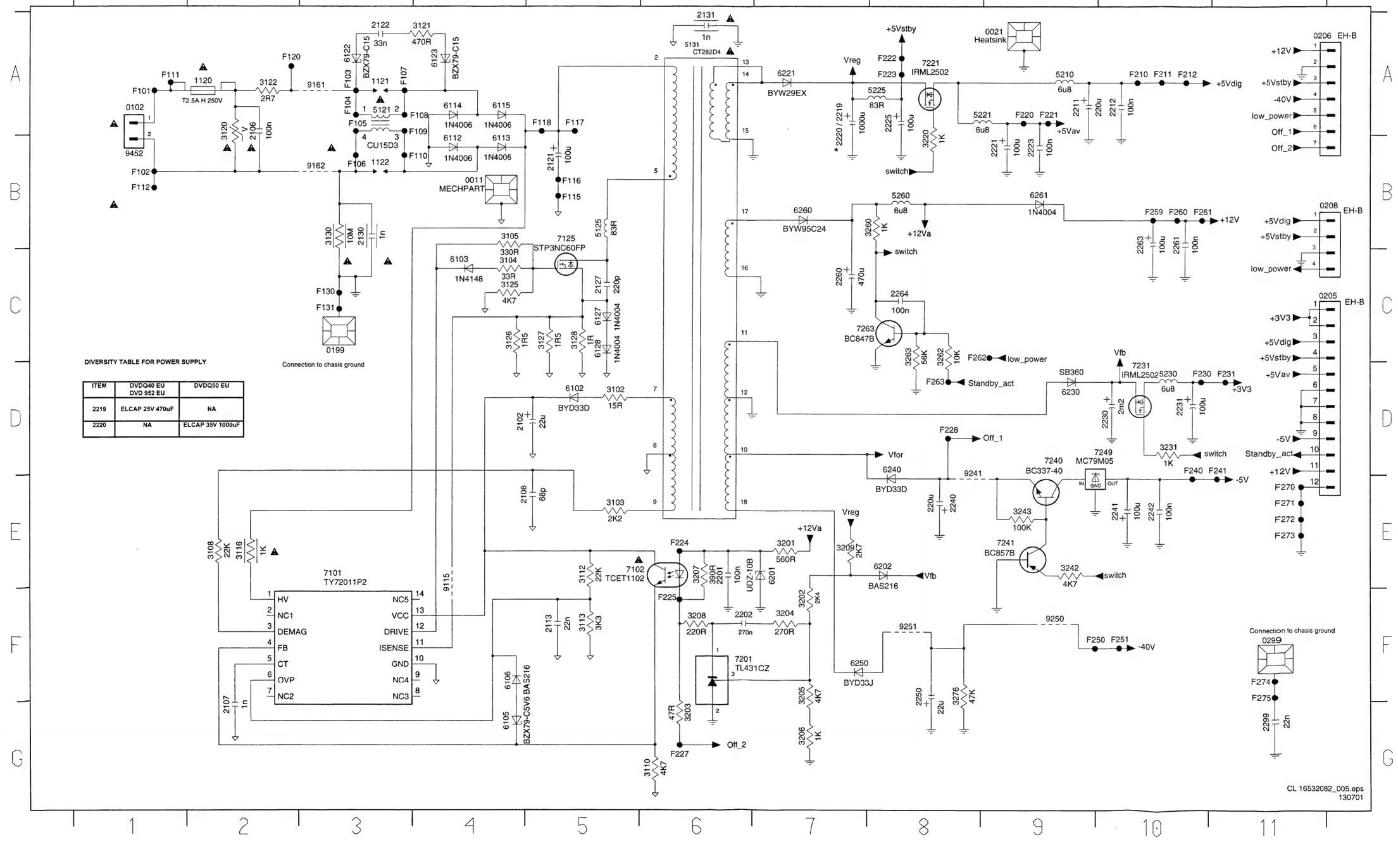

Layout Power Supply STEP 2001 EURO (Top View)

0011	C4	0208	A9	2121	C3	2220	B7	2241	C8	2272	C7	3120	C2	3201	B7	5131	B6	5230	C7	6111	A4	6127	C4	6250	A6	7125	C4	9115	C4	9214	B8	9221	C7
0021	B7	0299	A8	2122	C2	2221	C8	2250	A7	3102	C5	3121	C3	3251	A7	5161	B2	5241	C7	6112	B3	6128	B4	6260	A6	7201	C6	9122	C2	9215	C8	9241	C7
0101	B1	1120	C1	2127	B4	2222	B6	2251	A8	3105	C4	3122	C2	3261	A8	5162	A1	5250	A7	6113	A3	6220	B6	6261	B8	7204	B8	9161	C2	9216	C7	9250	A7
0102	B1	2102	C4	2130	A3	2225	B8	2252	A6	3106	A2	3126	B4	3267	A8	5210	C7	5260	A8	6114	B3	6221	B6	6270	C6	7240	C7	9162	A1	9217	C9	9251	A7
0199	A4	2106	C2	2131	B6	2230	C6	2260	B7	3111	A4	3127	B4	3271	C9	5220	C7	6102	C5	6115	A3	6230	B6	6271	B9	7249	C8	9210	B8	9218	A9	9261	B8
0205	B8	2109	B4	2211	C8	2231	C8	2262	A7	3115	C4	3128	B4	5121	B2	5221	C7	6103	C4	6122	C2	6240	C5	7101	C3	7250	A7	9211	C9	9219	B7		
0206	A8	2111	A5	2219	C7	2240	C6	2263	B8	3116	B3	3130	A3	5125	B4	5225	C7	6105	C3	6123	B2	6241	C5	7102	C6	7261	B8	9212	A9	9220	C7		

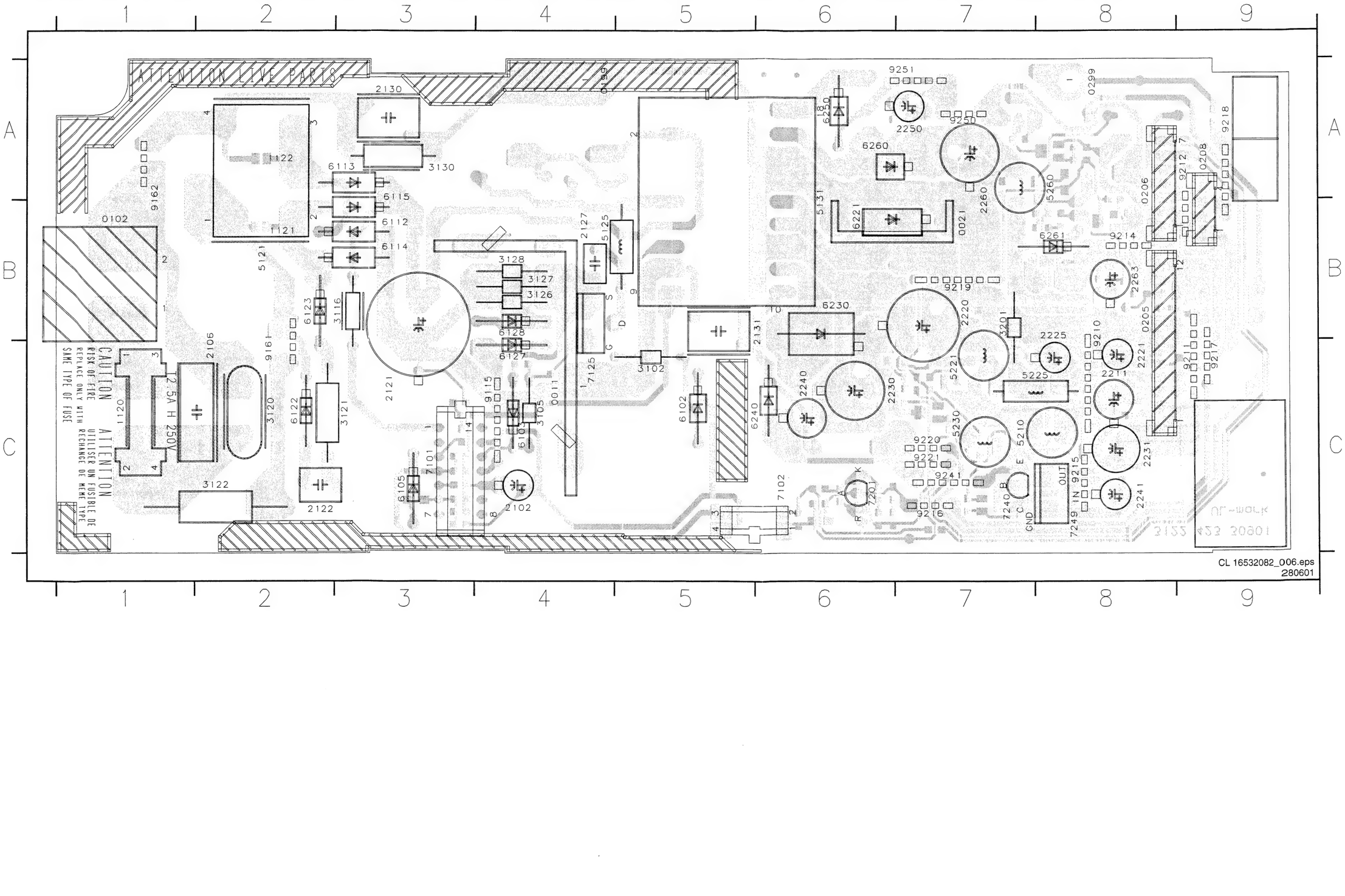

CL 16532082_006.eps
280601

Layout Power Supply Unit STEP 2001 EURO (Bottom View)

2107 A3	2201 A6	2223 A9	2265 B8	3108 A3	3125 A4	3205 A6	3209 A7	3241 A7	3252 C8	3262 B8	3266 B8	6202 A6	7241 A7	7264 B8
2108 A3	2202 A6	2242 A8	2299 C9	3110 A3	3202 A7	3206 A6	3220 A7	3242 A7	3253 C7	3263 B8	3276 C7	6262 C8	7251 C8	92022 C5
2110 A3	2203 A6	2261 B8	3103 A3	3112 A3	3203 A7	3207 A6	3230 A7	3243 A7	3254 C8	3264 B8	6106 A3	7221 A7	7262 C8	
2113 A3	2212 A8	2264 B8	3104 A4	3113 A3	3204 A6	3208 A6	3231 A7	3250 C7	3260 C7	3265 B8	6201 A6	7231 A7	7263 B8	

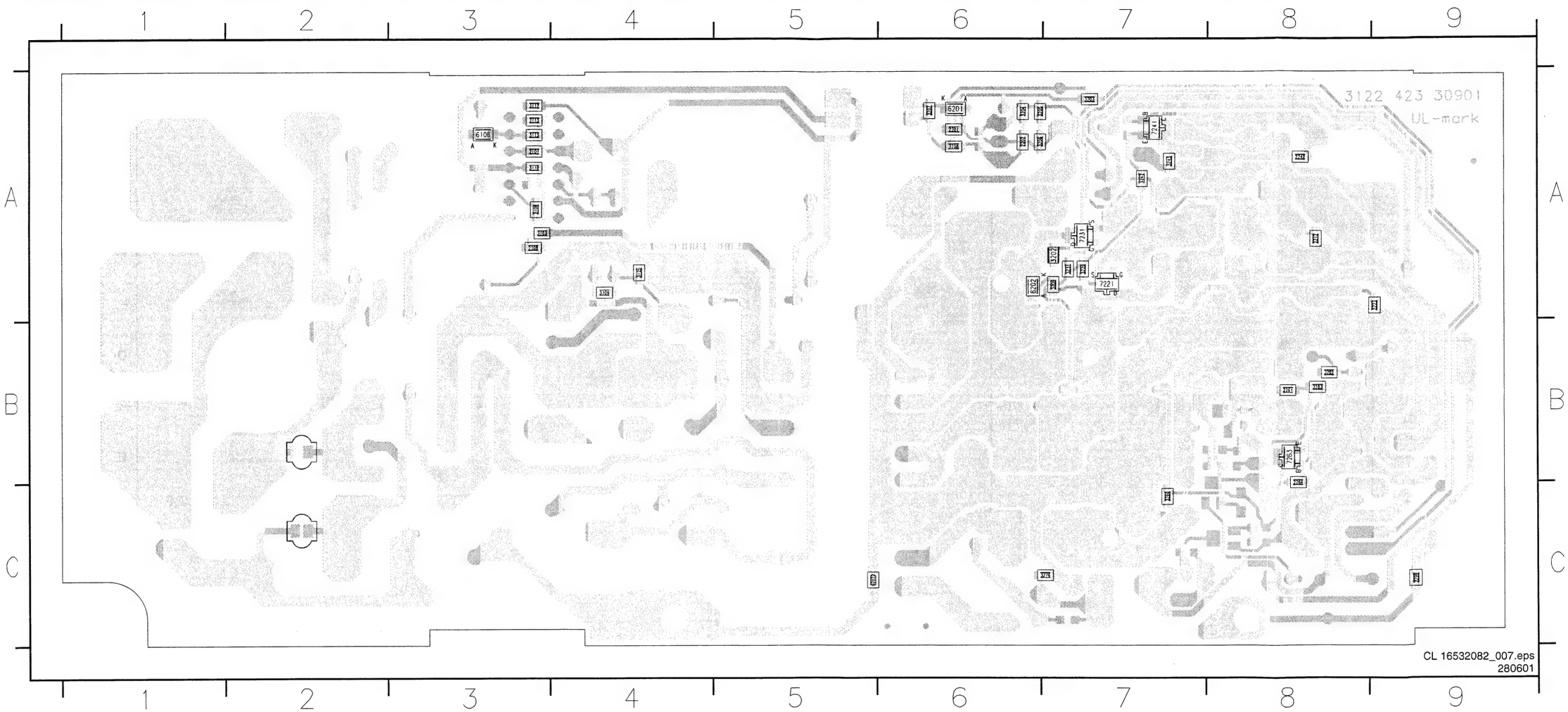

A/V Board (Video)

A1 AV_VIDEO

TO MONO BOARD

1100 A1
1101 E1
1401-A E13
1402 G13
1403-A B13
1403-B C13
1403-C D13
1404 H13
1405 A13
2100 B4
2101 B4
2102 B4
2103 B4
2104 A6
2105 A7
2106 A7
2107 D9
2109 A9
2110 A8
2111 C4
2112 E3
2113 F12
2114 F12
2115 H12
2116 H12
2117 C4
2118 E3
2119 E4
2120 H7
2121 H10
2122 I10
2123 I12
2124 I12
2125 C12
2126 D12
2127 E12
2128 B11
2129 B12
2130 E4
2131 F4
2132 B3
3100 A3
3101 B3
3102 C11
3103 C11
3104 C11
3105 C4
3106 E10
3107 D3
3108 F10
3109 E8
3110 E8
3111 E8
3112 G10
3113 F7
3114 G10
3115 F7
3116 F7
3117 E3
3118 D3
3119 E3
3120 I8
3121 I9
3122 H11
3128 B11
3129 A11
4100 E5
4101 C12
4102 C12
4103 D12
4104 C3
4105 E1
4106 B11
4107 C3
4108 A8
4109 A9
4110 E10
4111 A9
4112 G4
4113 H4
4114 H4
4115 H4
4116 H4
4117 H4
4118 A2
5100 C12
5101 D12
5102 D12
5103 H11
5104 E10
6100 D4
6101 D4
6102 D10
6103 D11
6104 D11
6105 F10
6106 F10
6107 H10
7101 E8
7102 E7
7103 F7
7104 D3
7400 A7
7401 D4
7402 I8
7403 F3
7404 A2

ITEM NO	DESCRIPTION	DVDC50EU 3139248811101	DVDC40EU 3139248811051	DVD952EU 3139248811081	DVDQ50AP 3139248811091
1403	CON BM C/NCH H 3P F RDBUGN B		X	X	X
2103	ELCAP 25V S 100U PM20 COL A	X		X	X
2103	ELCAP 6V3 S 1000U PM20 COL A		X		
2111	ELCAP 7MM 6V3 1000U PM20 COL A	X		X	X
2111	ELCAP 7MM 16V 100U PM20 COL A		X		
3102	RST SM 0603 75R PM5 COL		X	X	X
3103	RST SM 0603 75R PM5 COL		X	X	X
3104	RST SM 0603 75R PM5 COL		X	X	X
4101	RST SM 0603 JUMP 0R05 COL		X	X	X
4102	RST SM 0603 JUMP 0R05 COL		X	X	X
4103	RST SM 0603 JUMP 0R05 COL		X	X	X
4105	RST SM 0603 JUMP 0R05 COL	X	X	X	
4106	RST SM 0603 JUMP 0R05 COL				X
6106	DIO REG SM BZX384-C8V2 COL R				X
6107	DIO REG SM BZX384-C8V2 COL R				X

TP7 PCM_OUT0: 2V / DIV AC, 1us / DIV
TP8 SCLK: 2V / DIV AC, 10us / DIV
TP9 SCLK: 2V / DIV AC, 100ns / DIV
TP10 PCM_CLK: 2V / DIV AC, 20ns / DIV
TP27 PCM_OUT1: 2V / DIV AC, 500ns / DIV
TP28 PCM_OUT2: 2V / DIV AC, 500ns / DIV

TP4 CVBS: 200mV / DIV AC, 20us / DIV
TP5 C_ENC: 200mV / DIV AC, 20us / DIV
TP6 Y_ENC: 200mV / DIV AC, 20us / DIV
TP11 DIG_OUT: 2V / DIV AC, 100ns / DIV
TP14 CVBS_OUT: 500mV / DIV AC, 20us / DIV
TP15 C_OUT: 500mV / DIV AC, 20us / DIV
TP16/17 Y_OUT: 50mV / DIV AC, 20us / DIV
TP18 VID_OUT: 500mV / DIV AC, 20us / DIV
TP19 V_VID_OUT: 500mV / DIV AC, 20us / DIV
TP21 DIG_OUT: 200mV / DIV AC, 200ns / DIV
TP22 U_VID: 100mV / DIV AC, 200ns / DIV
TP23 V_VID: 100mV / DIV AC, 200ns / DIV

* OPTION
V DC vtg measured in STOP-MODE

BARE BOARD 3139 243 30282

CL 16532082_034.eps
120701

A/V Board (Audio 1)

A2 AV_AUDIO1

ITEM NO	DESCRIPTION	DVDQ50EU 3139248 8101	DVDQ40EU 3139248 8061	DVDQ52EU 3139248 8081	DVDQ50AP 3139248 8091
2203	ELCAP 7MM 16V 47U PM20 COL A		X		
2211	ELCAP 5MM 16V 10U PM20 COL A		X		
2212	ELCAP 5MM 16V 10U PM20 COL A		X		
2217	CER2 0603 X7R 16V 100N COL		X		
2218	CER2 0603 X7R 16V 100N COL		X		
2222	CER2 0603 X7R 16V 100N COL		X		
2243	CER1 0603 X7R 50V 680P COL	X		X	X
2243	CER1 0603 NP0 25V 1N COL		X		
2245	CER1 0603 X7R 50V 680P COL	X		X	X
2245	CER1 0603 NP0 25V 1N COL		X		
3202	RST SM 0603 47R PM5 COL		X		
3224	RST SM 0603 220R PM5 COL	X		X	X
3224	RST SM 0603 470R PM5 COL		X		
3228	RST SM 0603 220R PM5 COL	X		X	X
3228	RST SM 0603 470R PM5 COL		X		
7500	IC SM UDA1334TS/N1 (PHSE) R		X		

1400-A B13
1400-B E13
1400-C H13
2202 I3
2203 C3
2204 F3
2209 H5
2210 F5
2211 C5
2212 C5
2213 F5
2214 I5
2215 I4
2216 F4
2217 C4
2218 A4
2219 G3
2220 D3
2221 G5
2222 B5
2223 D5
2224 I7
2225 E7
2227 G7
2228 D7
2230 C7
2231 G7
2234 G7
2235 D7
2238 D8
2239 E8
2240 G8
2242 H8
2243 C12
2245 C12
2246 F12
2247 F12
2248 I12
2249 I12
2250 B2
2251 E2
2252 H1
3200 H2
3201 E2
3202 B2
3204 I7
3205 F7
3206 I6
3208 E6
3209 I6
3210 F6
3212 H6
3213 D6
3216 D6
3217 D7
3219 G6
3220 G10
3221 D10
3222 A10
3223 G9
3224 A10
3225 D9
3226 H7
3227 H9
3228 B10
3229 E9
3230 B10
3231 E10
3232 I10
3233 C12
3234 C12
3235 F12
3236 F12
3237 I12
3238 I12
7200 D11
7201 A11
7202 G11
7203 I11
7204 F11
7205 C11
7500 A3
7502 D3
7503-A D7
7503-B E7
7504 G3
7505-A G7
7505-B H7

V DC vtg measured in STOP-MODE

BARE BOARD 3139 243 30282

CL 16532082_035.eps
120701

A/V Board (Audio 2)

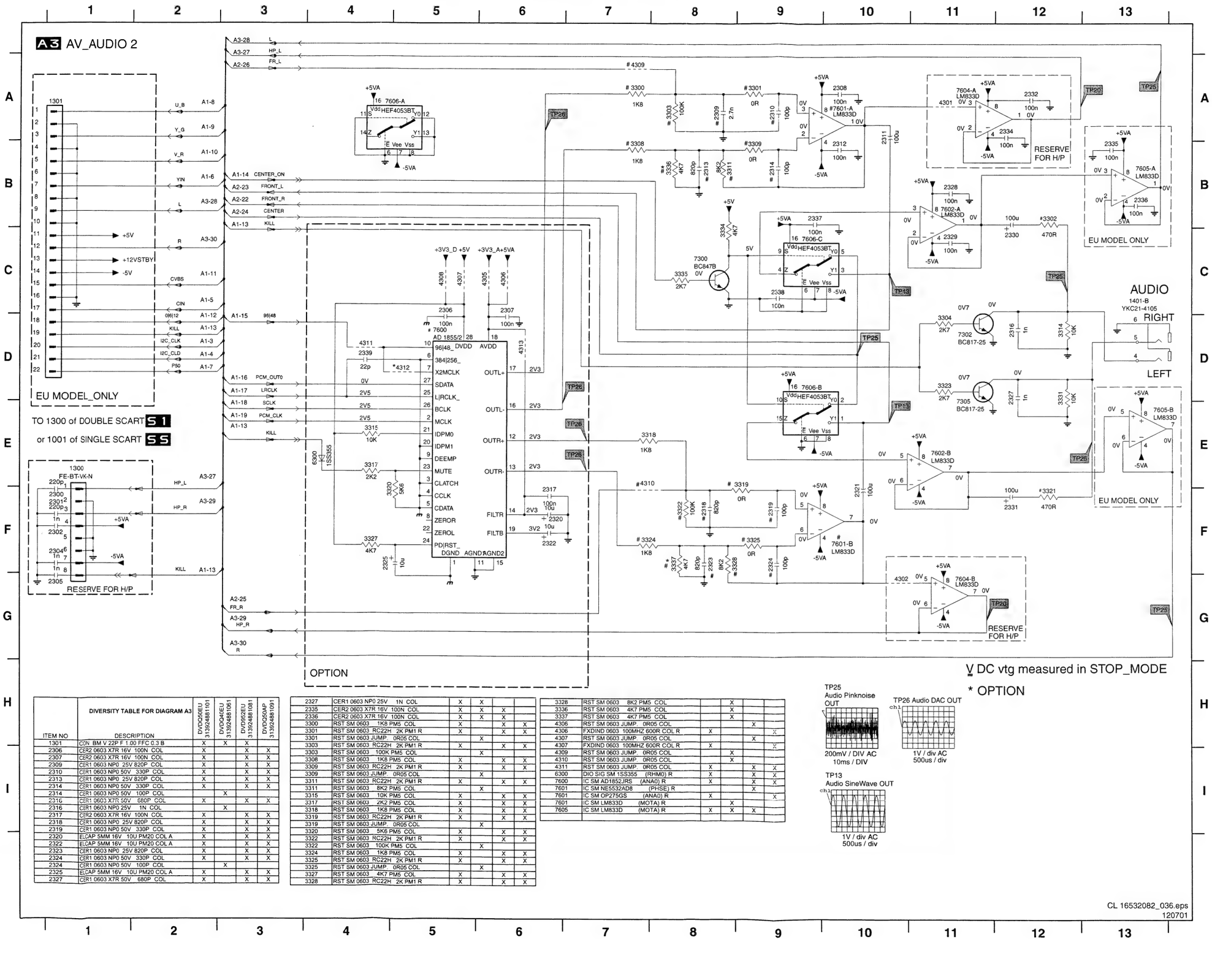

ITEM NO	DESCRIPTION	DVDQ56EU 313924881101	DVDQ40EU 313924881061	DVDQ52EU 313924881081	DVDQ50AP 313924881091
1301	CON BM V 22P F 1.00 FFC 0.3 B	X	X	X	X
2306	CER2 0603 X7R 16V 100N COL	X		X	X
2307	CER2 0603 X7R 16V 100N COL	X		X	X
2309	CER1 0603 NP0 25V 820P COL	X		X	X
2310	CER1 0603 NP0 50V 330P COL	X		X	X
2313	CER1 0603 NP0 25V 820P COL	X		X	X
2314	CER1 0603 NP0 50V 330P COL	X		X	X
2314	CER1 0603 NP0 50V 100P COL		X		
2316	CER1 0603 X7R 50V 680P COL	X		X	X
2316	CER1 0603 NP0 25V 1N COL		X		
2317	CER2 0603 X7R 16V 100N COL	X		X	X
2318	CER1 0603 NP0 25V 820P COL	X		X	X
2319	CER1 0603 NP0 50V 330P COL	X		X	X
2320	ELCAP 5MM 16V 10U PM20 COL A	X		X	X
2322	ELCAP 5MM 16V 10U PM20 COL A	X		X	X
2323	CER1 0603 NP0 25V 820P COL	X		X	X
2324	CER1 0603 NP0 50V 330P COL	X		X	X
2324	CER1 0603 NP0 50V 100P COL		X		
2325	ELCAP 5MM 16V 10U PM20 COL A	X		X	X
2327	CER1 0603 X7R 50V 680P COL	X		X	X

2327	CER1 0603 NP0 25V 1N COL	X	X		
2335	CER2 0603 X7R 16V 100N COL	X	X	X	
2336	CER2 0603 X7R 16V 100N COL	X	X	X	
3300	RST SM 0603 1K8 PM5 COL	X		X	X
3301	RST SM 0603 RC22H 2K PM1 R	X		X	X
3301	RST SM 0603 JUMP 0R05 COL		X		
3303	RST SM 0603 RC22H 2K PM1 R	X		X	X
3303	RST SM 0603 100K PM5 COL		X		
3308	RST SM 0603 1K8 PM5 COL	X		X	X
3309	RST SM 0603 RC22H 2K PM1 R	X		X	X
3309	RST SM 0603 JUMP 0R05 COL		X		
3311	RST SM 0603 RC22H 2K PM1 R	X		X	X
3311	RST SM 0603 8K2 PM5 COL		X		
3315	RST SM 0603 10K PM5 COL	X		X	X
3317	RST SM 0603 2K2 PM5 COL	X		X	X
3318	RST SM 0603 1K8 PM5 COL	X		X	X
3319	RST SM 0603 RC22H 2K PM1 R	X		X	X
3319	RST SM 0603 JUMP 0R05 COL		X		
3320	RST SM 0603 5K6 PM5 COL	X		X	X
3322	RST SM 0603 RC22H 2K PM1 R	X		X	X
3322	RST SM 0603 100K PM5 COL		X		
3324	RST SM 0603 1K8 PM5 COL	X		X	X
3325	RST SM 0603 RC22H 2K PM1 R	X		X	X
3325	RST SM 0603 JUMP 0R05 COL		X		
3327	RST SM 0603 4K7 PM5 COL	X		X	X
3328	RST SM 0603 RC22H 2K PM1 R	X		X	X

3328	RST SM 0603 8K2 PM5 COL		X		
3336	RST SM 0603 4K7 PM5 COL		X		
3337	RST SM 0603 4K7 PM5 COL		X		
4306	RST SM 0603 JUMP 0R05 COL			X	
4306	FXDIND 0603 100MHZ 600R COL R	X			X
4307	RST SM 0603 JUMP 0R05 COL			X	
4307	FXDIND 0603 100MHZ 600R COL R	X			X
4309	RST SM 0603 JUMP 0R05 COL		X		
4310	RST SM 0603 JUMP 0R05 COL		X		
4311	RST SM 0603 JUMP 0R05 COL	X		X	X
6300	DIO SIG SM 1SS355 (RHM0) R	X		X	X
7600	IC SM AD1852JRS (ANA0) R	X		X	X
7601	IC SM NE5532AD8 (PHSE) R			X	
7601	IC SM OP275GS (ANA0) R	X			X
7601	IC SM LM833D (MOTA) R		X		
7605	IC SM LM833D (MOTA) R	X	X	X	

1300 E1
1301 A1
1401-B C13
2300 F1
2301 F1
2302 F1
2304 F1
2305 G1
2306 C5
2307 C6
2308 A10
2309 A8
2310 A9
2311 A10
2312 B10
2313 B8
2314 B9
2316 D12
2317 F6
2318 F8
2319 F9
2320 F6
2321 F10
2322 F6
2323 F8
2324 F9
2325 F4
2327 D12
2328 B11
2329 C11
2330 C12
2331 F12
2332 A12
2334 A12
2335 B13
2336 B13
2337 B9
2338 C9
2339 D4
3300 A7
3301 A9
3302 B12
3303 A8
3304 D11
3308 B7
3309 B9
3311 B8
3314 D12
3315 E4
3317 E4
3318 E7
3319 E9
3320 F5
3321 F12
3322 F8
3323 D11
3324 F7
3325 F9
3327 F4
3328 F8
3331 D12
3334 C8
3335 C8
3336 B8
3337 F8
4301 A11
4302 G10
4305 C6
4306 C6
4307 C5
4308 C5
4309 A7
4310 F7
4311 D5
4312 D5
4313 D6
6300 E4
7300 C8
7302 D11
7305 E11
7600 D5
7601-A A10
7601-B F10
7602-A B11
7602-B E11
7604-A A11
7604-B G11
7605-A B13
7605-B E13
7606-A A5
F300 A1
F301 D1
F302 A1
F303 B1
F304 B1
F305 B1
F307 C1
F310 E1
F312 F1
F313 F1
F321 F1
F322 F1
F323 D1
F324 C1
I154 D5
I300 A9
I303 A10
I304 D13
I305 B9
I308 C12
I312 F10
I314 F9
I316 F13
I317 C8
I319 B10
I321 C11
I324 E10
I326 E11
I331 A7
I332 B7
I333 E5
I334 E7
I335 E5
I336 E7
I337 F6
I338 F5
I339 F6
I340 A11
I341 B8
I342 B10
I343 B12
I344 C8
I345 D11
I346 D11
I347 E10
I348 F12
I349 F8
I350 G11
I351 E4
I352 A8
I353 E8

Layout A/V Board (Top View)

1100 A8 1301 A14 1402 E14 1405 E15 2104 D14 2111 C11 2118 A1 2132 B16 2204 C5 2211 B11 2214 C3 2240 E4 2320 B9 2325 A10 5100 D12 5103 D1 7402 E3
1101 A6 1400 D6 1403 E12 2101 C13 2106 B14 2112 C1 2121 D2 2202 B3 2209 D3 2212 B10 2238 D5 2242 C4 2321 C8 2330 D9 5101 D11 5104 D10
1300 A13 1401 D9 1404 E2 2103 B13 2109 C15 2117 C12 2130 A3 2203 B11 2210 C5 2213 B5 2239 B6 2311 B7 2322 A9 2331 D8 5102 D10 7401 A2

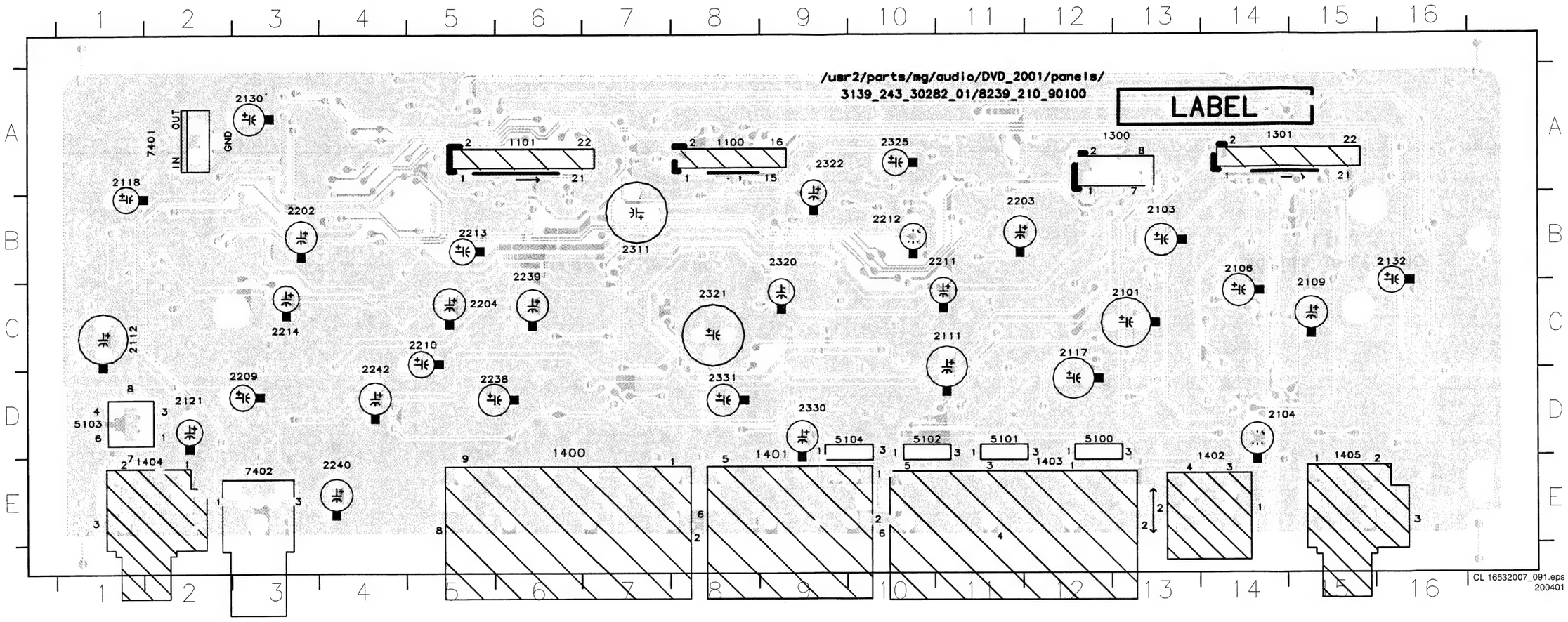

A/V Board (Overview Bottom View)

2100	C4	2125	E5	2223	B13	2249	E12	2312	B9	2335	C7	3109	D2	3128	D2	3217	C11	3232	D13	3311	B9	3331	E9
2102	B4	2126	E6	2224	C13	2250	B15	2313	B8	2336	D8	3110	D2	3129	D2	3219	D14	3233	D9	3314	E8	3334	B11
2105	C3	2127	E7	2225	B11	2251	A7	2314	B9	2337	C10	3111	D2	3200	B14	3220	E13	3234	E10	3315	A7	3335	B11
2107	D2	2128	E2	2227	D13	2252	B13	2316	E8	2338	D10	3112	E3	3201	B13	3221	D11	3235	E10	3317	A7	3336	B8
2110	C2	2129	E1	2228	C11	2300	A5	2317	B8	2339	B7	3113	C1	3202	A6	3222	D10	3236	E11	3318	C9	3337	C9
2113	E8	2131	A14	2230	C11	2301	B5	2318	B9	3100	C4	3114	E4	3204	C13	3223	E13	3237	E12	3319	C9	4100	B15
2114	E8	2215	B14	2231	D13	2302	A5	2319	C9	3101	B3	3115	C1	3205	B11	3224	D10	3238	E12	3320	A7	4101	D5
2115	E3	2216	C12	2234	D14	2304	B4	2323	C9	3102	D4	3116	D1	3206	C14	3225	D11	3300	B9	3321	D9	4102	D6
2116	E4	2217	B6	2235	C12	2305	A4	2324	C9	3103	D5	3117	C16	3208	B12	3226	D13	3301	B9	3322	B9	4103	D7
2119	A15	2218	B6	2243	E10	2306	B7	2327	E9	3104	D6	3118	C15	3209	C14	3227	D12	3302	D8	3323	D9	4104	A8
2120	E14	2219	B15	2245	E10	2307	B8	2328	C8	3105	C6	3119	C15	3210	B12	3228	D9	3303	B9	3324	C9	4105	A12
2122	D15	2220	C13	2246	E10	2308	B10	2329	D8	3106	E8	3120	E15	3212	D14	3229	D11	3304	D8	3325	C9	4106	D2
2123	E15	2221	B14	2247	E11	2309	B9	2332	B5	3107	C16	3121	D15	3213	C12	3230	D9	3308	B8	3327	A7	4107	A11
2124	E15	2222	A6	2248	E12	2310	B9	2334	B4	3108	E8	3122	E16	3216	C12	3231	D11	3309	B9	3328	C9	4108	C4

4109	C3	4307	A7	6106	D2	7302	D8	7605	C7														
4110	D7	4308	A7	6107	E4	7305	D9	7606	C10														
4111	B3	4309	B9	6300	A8	7400	C3																
4112	A14	4310	C9	7101	D2	7403	A13																
4113	B13	4311	B10	7102	C2	7404	C1																
4114	B13	4312	C7	7103	C1	7500	B6																
4115	A13	4313	A10	7104	C15	7502	B13																
4116	A14	4400	C10	7200	D11	7503	C12																
4117	A14	6100	C15	7201	D10	7504	B14																
4118	B1	6101	C15	7202	E13	7505	D14																
4301	B9	6102	D4	7203	D12	7600	B8																
4302	C9	6103	D5	7204	D11	7601	B9																
4305	B11	6104	D6	7205	D10	7602	C8																
4306	B11	6105	D7	7300	B10	7604	B5																

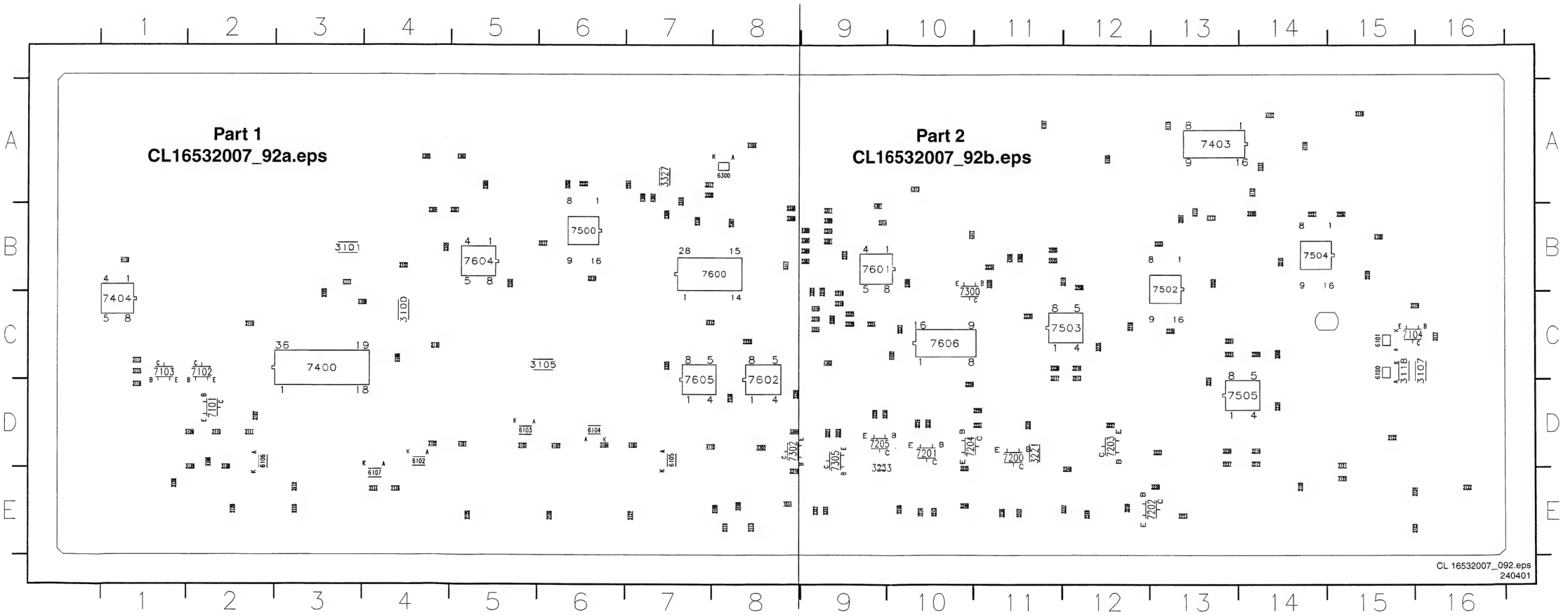

A/V Board (Part 1 Bottom View)

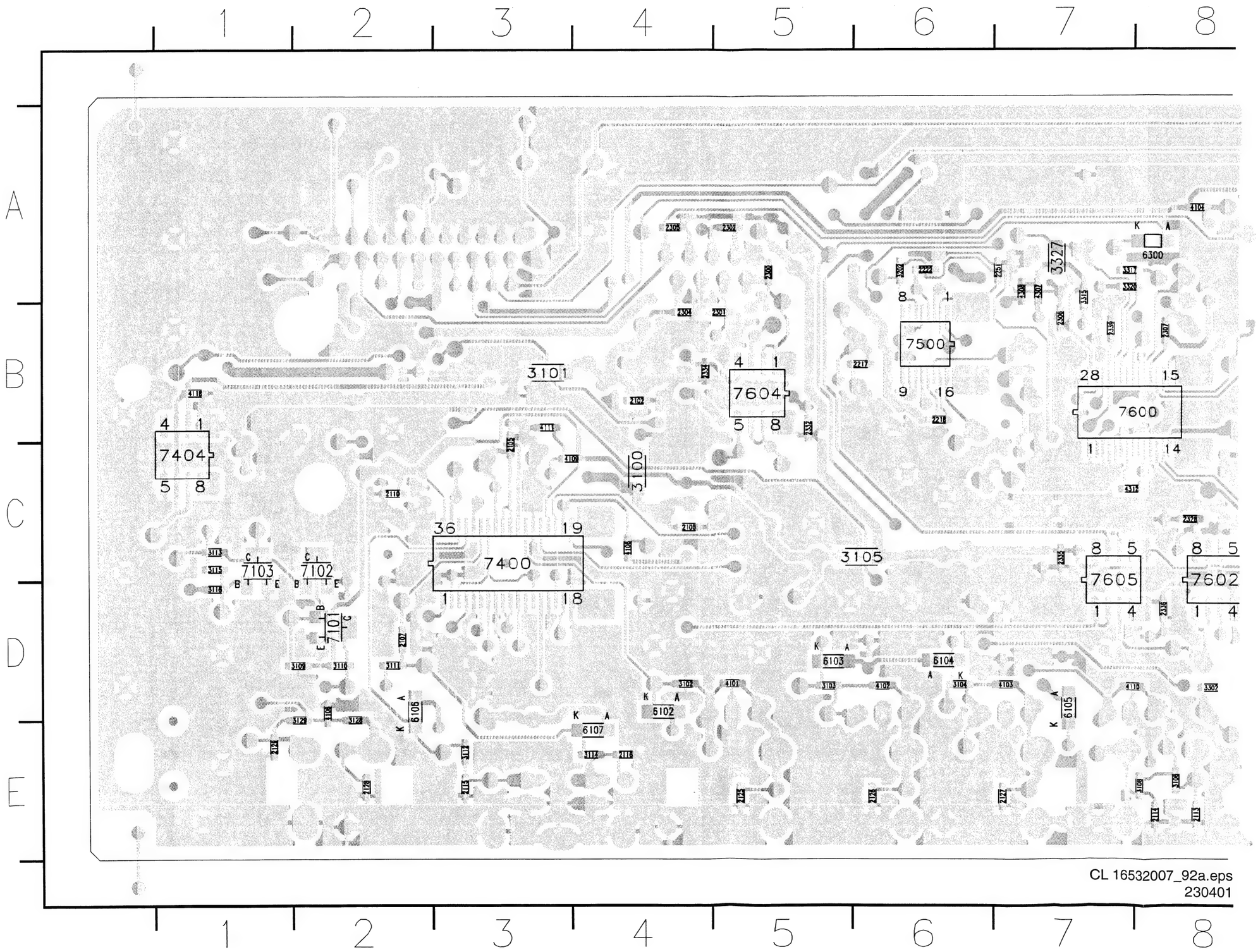

CL 16532007_92a.eps
230401

A/V Board (Part 2 Bottom View)

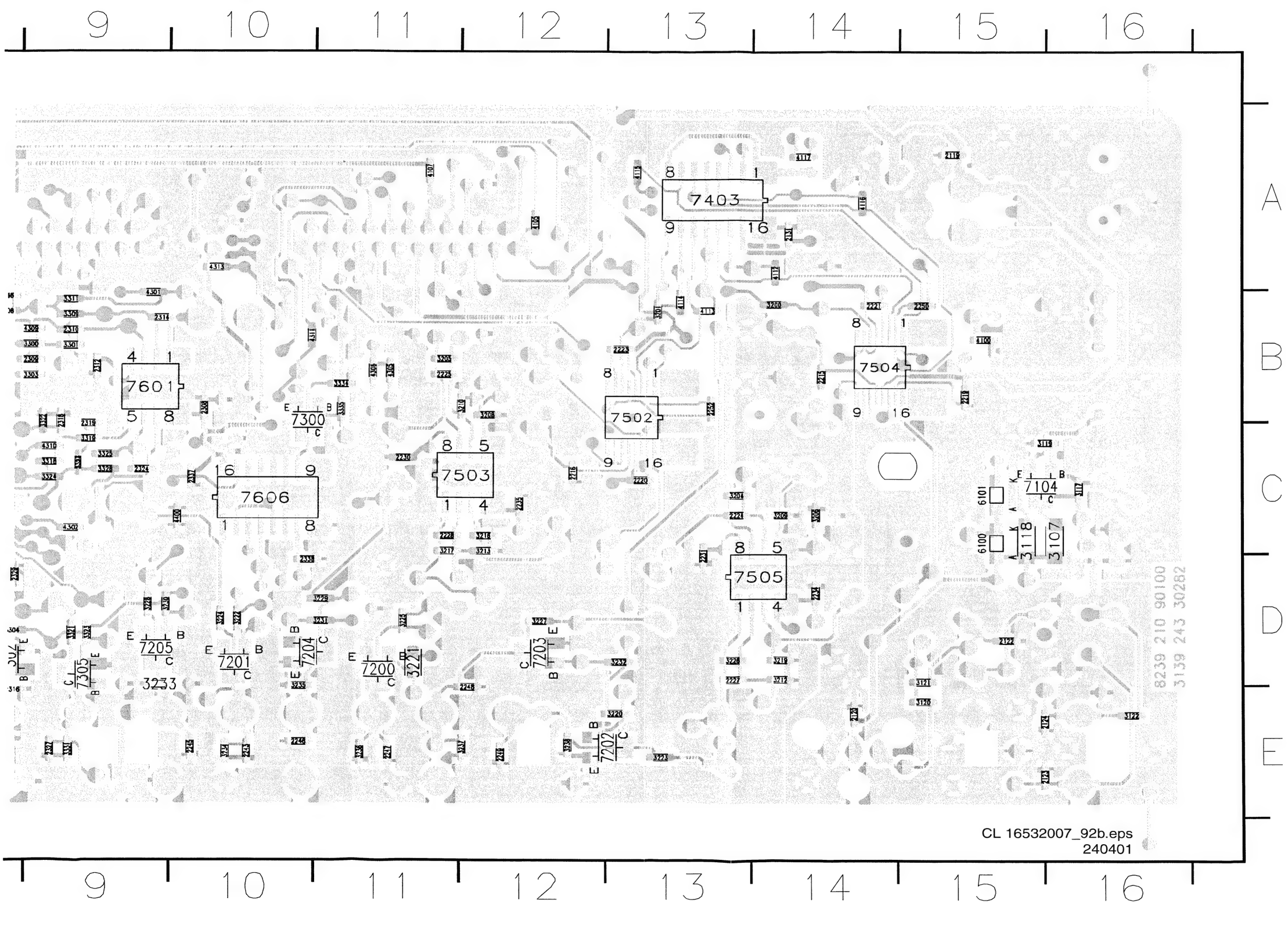

CL 16532007_92b.eps
240401

Control Panel

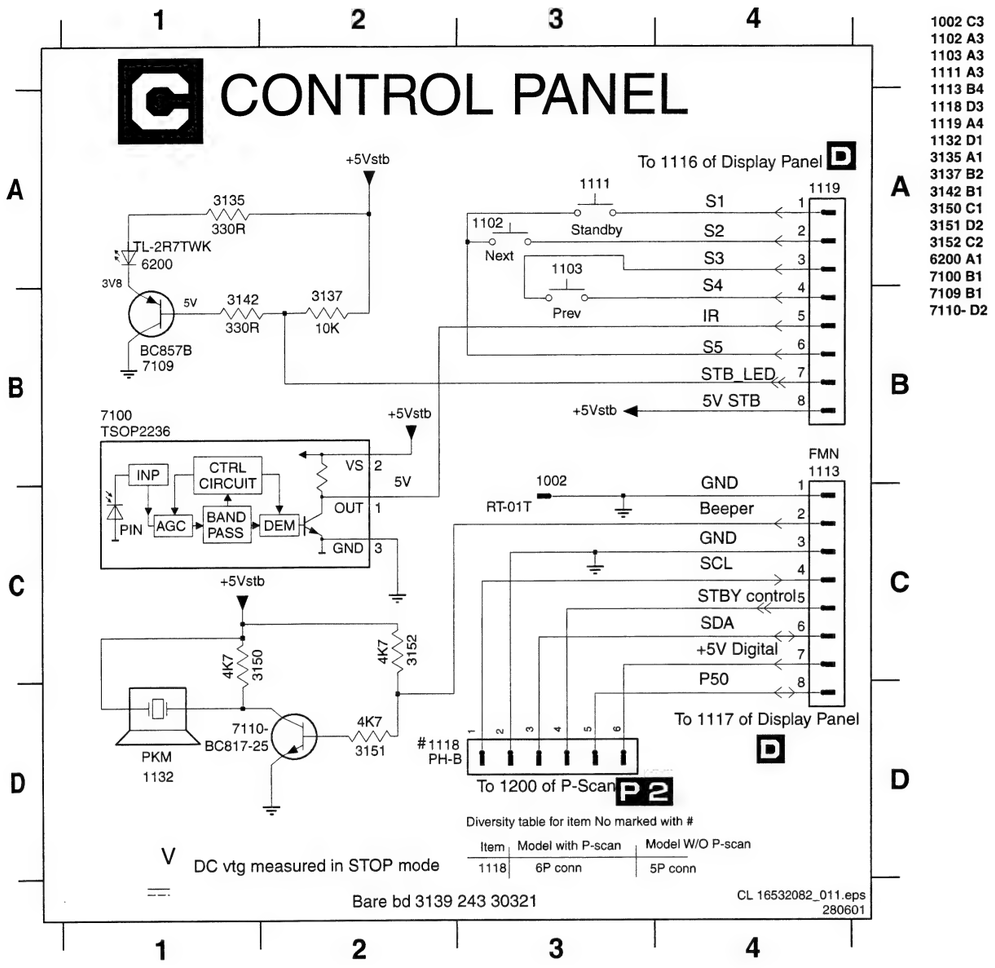

Layout Control Panel (Top View)

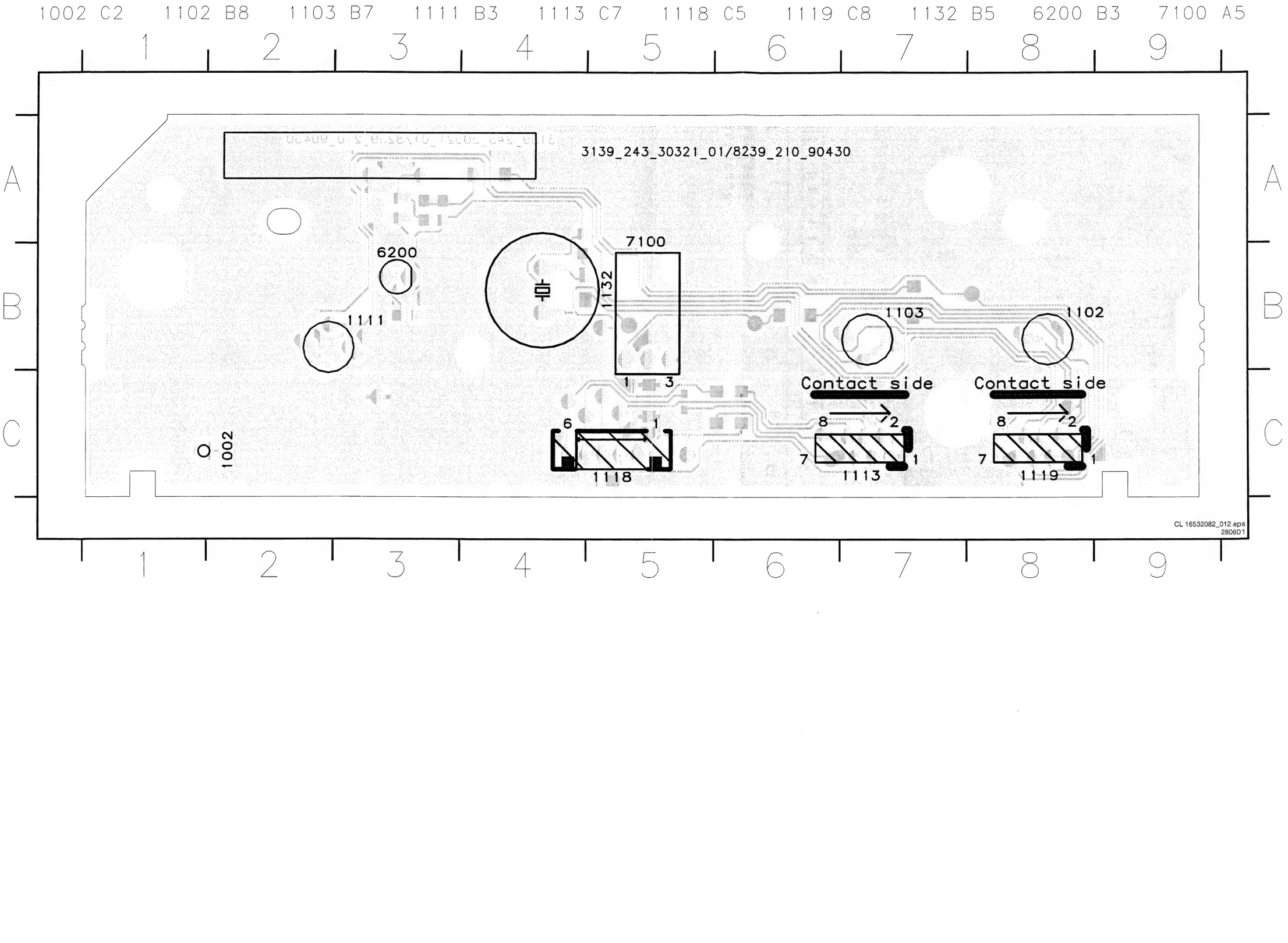

Layout Control Panel (Bottom View)

3135 B7 3137 A7 3142 A7 3150 B6 4134 B3 4135 B4 4136 C4 4137 C4 4138 C5 4139 A6 4305 C5 6105 B6 7109 A7

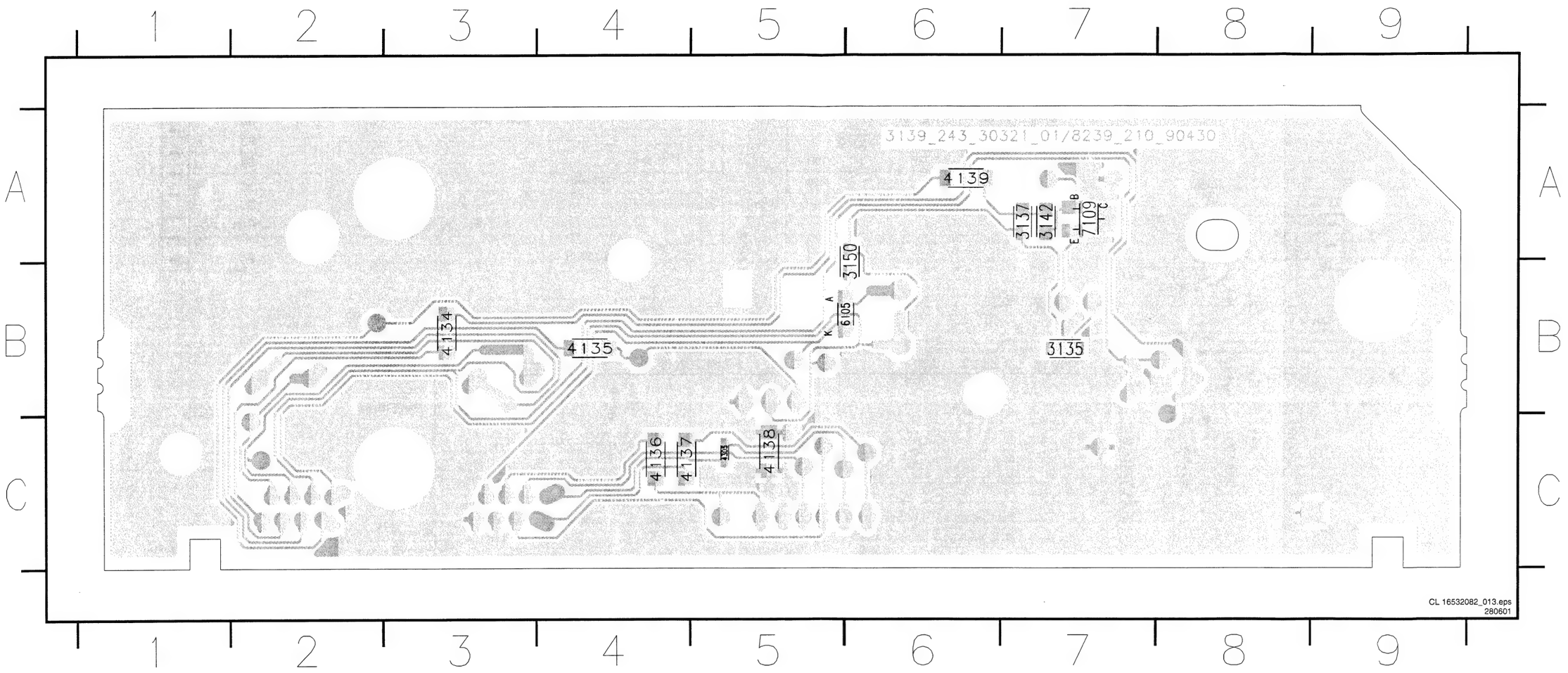

Display Board

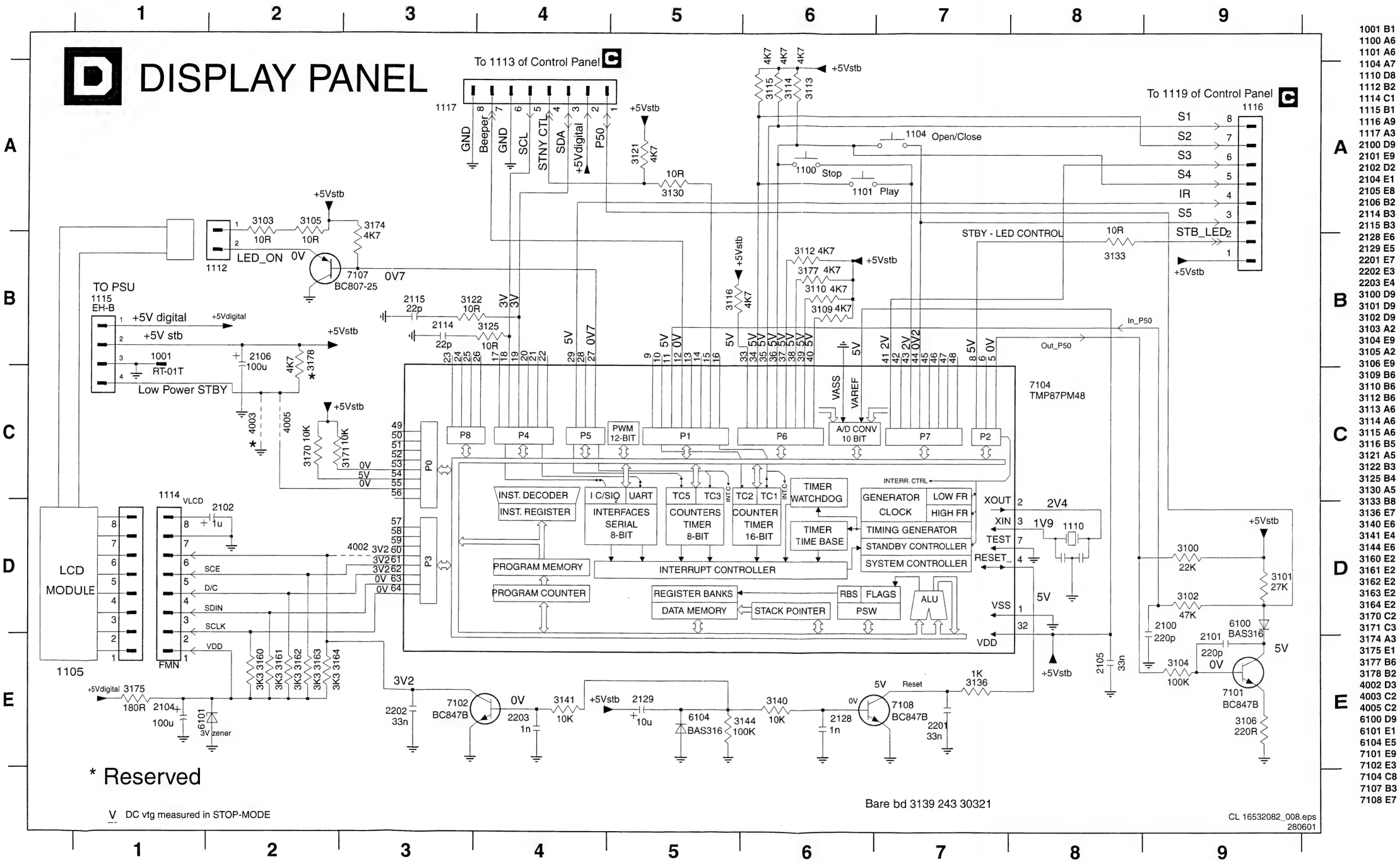

1001 B1
1100 A6
1101 A6
1104 A7
1110 D8
1112 B2
1114 C1
1115 B1
1116 A9
1117 A3
2100 D9
2101 E9
2102 D2
2104 E1
2105 E8
2106 B2
2114 B3
2115 B3
2128 E6
2129 E5
2201 E7
2202 E3
2203 E4
3100 D9
3101 D9
3102 D9
3103 A2
3104 E9
3105 A2
3106 E9
3109 B6
3110 B6
3112 B6
3113 A6
3114 A6
3115 A6
3116 B5
3121 A5
3122 B3
3125 B4
3130 A5
3133 B8
3136 E7
3140 E6
3141 E4
3144 E6
3160 E2
3161 E2
3162 E2
3163 E2
3164 E2
3170 C2
3171 C3
3174 A3
3175 E1
3177 B6
3178 B2
4002 D3
4003 C2
4005 C2
6100 D9
6101 E1
6104 E5
7101 E9
7102 E3
7104 C8
7107 B3
7108 E7

Layout Display Board (Top View)

1001 A3
1100 A2
1101 A2
1104 A1
1110 A3
1112 A3
1114 A3
1115 A2
1116 A1
1117 A1
2102 A3
2104 A1
2106 A2
2129 A2

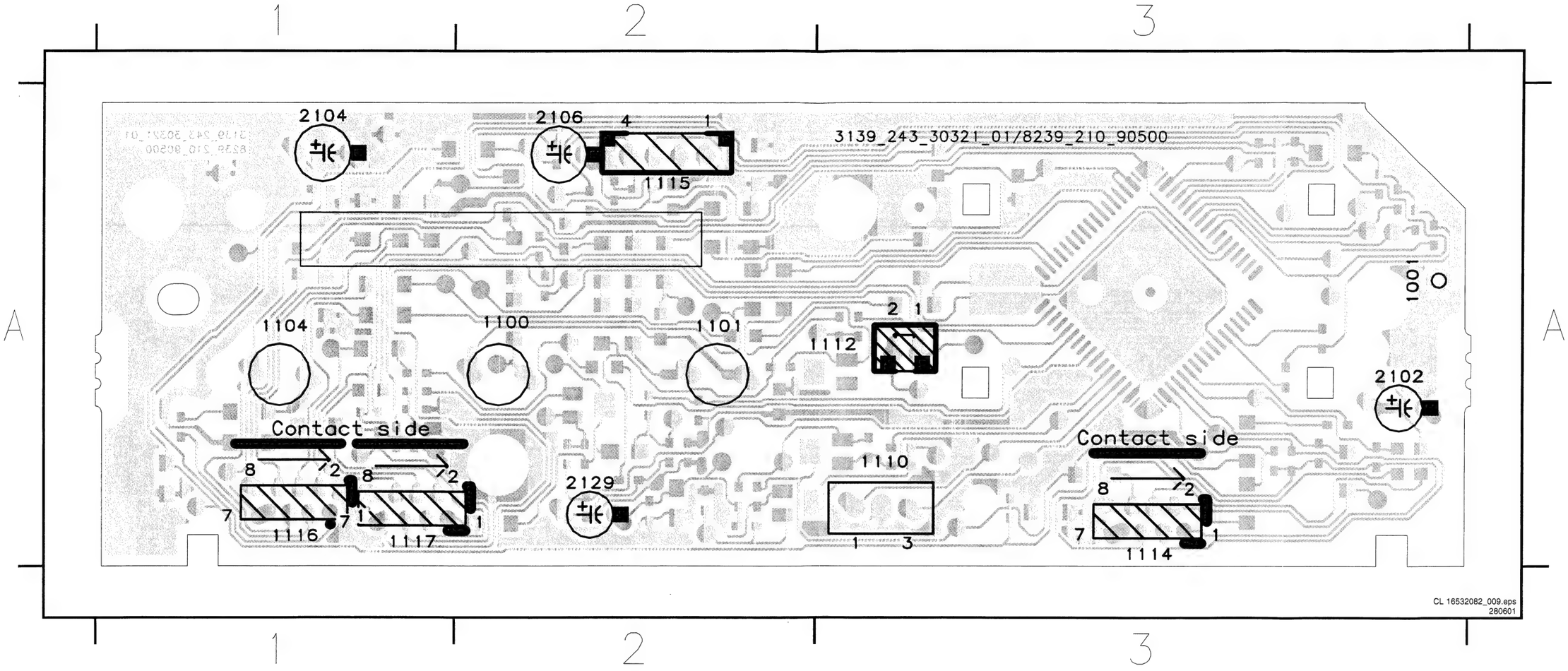

Layout Display Board (Bottom View)

2100 A2	3102 A2	3116 A1	3161 A1	4003 A2	4110 A2	4121 A2	4132 A1	4210 A2	7104 A1
2101 A2	3103 A1	3121 A2	3162 A1	4005 A2	4111 A2	4122 A2	4133 A1	4211 A1	7107 A1
2105 A1	3104 A2	3122 A3	3163 A1	4101 A2	4112 A2	4123 A1	4201 A2	4301 A3	7108 A2
2114 A3	3105 A1	3125 A3	3164 A1	4102 A3	4113 A3	4124 A2	4202 A2	4302 A3	
2115 A3	3106 A3	3130 A2	3170 A1	4103 A3	4114 A3	4125 A2	4203 A3	4303 A2	
2128 A2	3109 A1	3133 A3	3171 A1	4104 A1	4115 A3	4126 A2	4204 A3	4304 A2	
2201 A1	3110 A1	3136 A1	3174 A2	4105 A3	4116 A1	4127 A2	4205 A1	6100 A2	
2202 A2	3112 A1	3140 A2	3175 A3	4106 A2	4117 A1	4128 A2	4206 A1	6101 A3	
2203 A1	3113 A2	3141 A2	3177 A1	4107 A3	4118 A2	4129 A2	4207 A2	6104 A2	
3100 A2	3114 A1	3144 A2	3178 A2	4108 A3	4119 A1	4130 A2	4208 A2	7101 A2	
3101 A2	3115 A1	3160 A1	4002 A1	4109 A3	4120 A3	4131 A1	4209 A2	7102 A1	

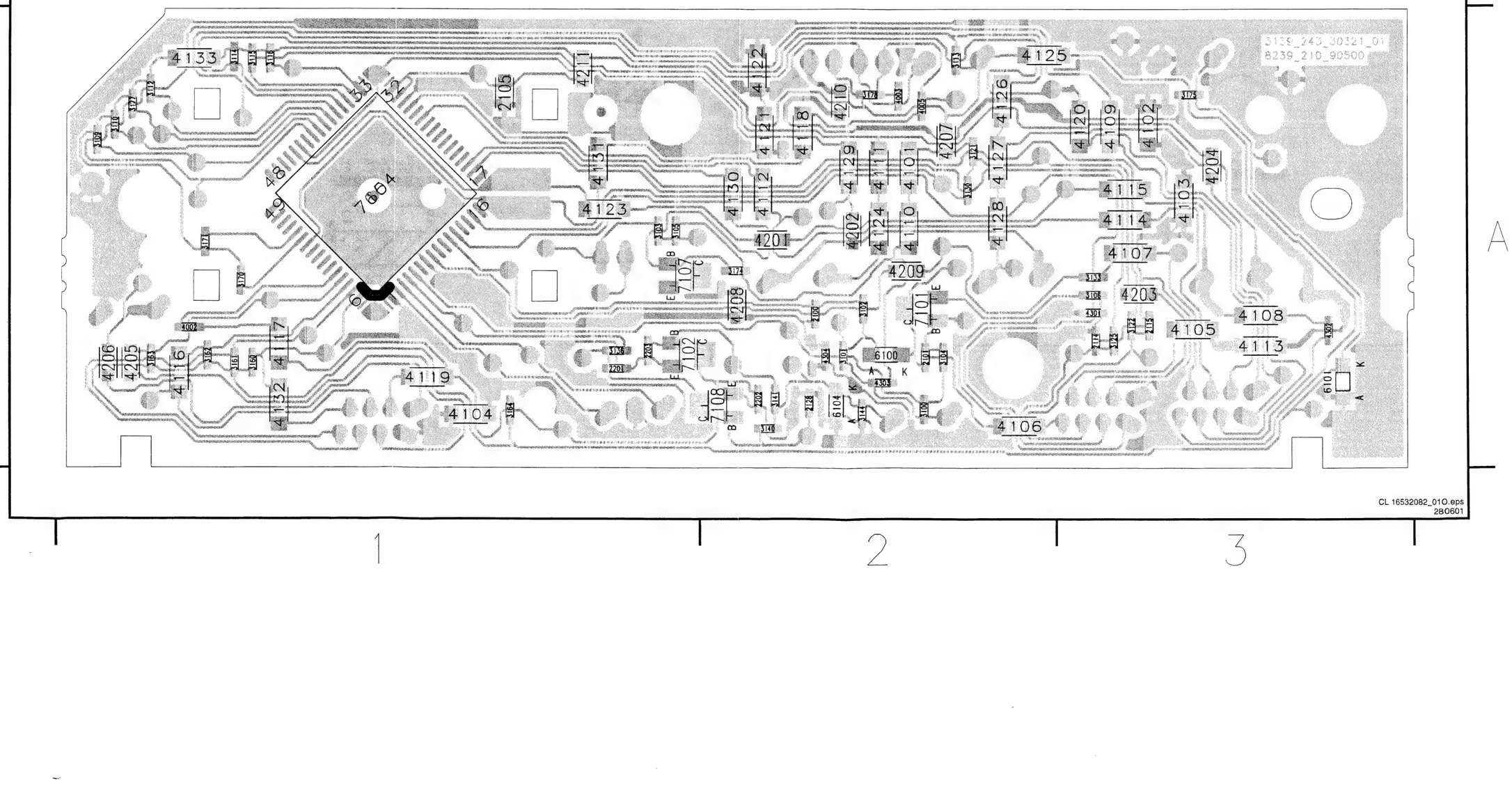

DTS video

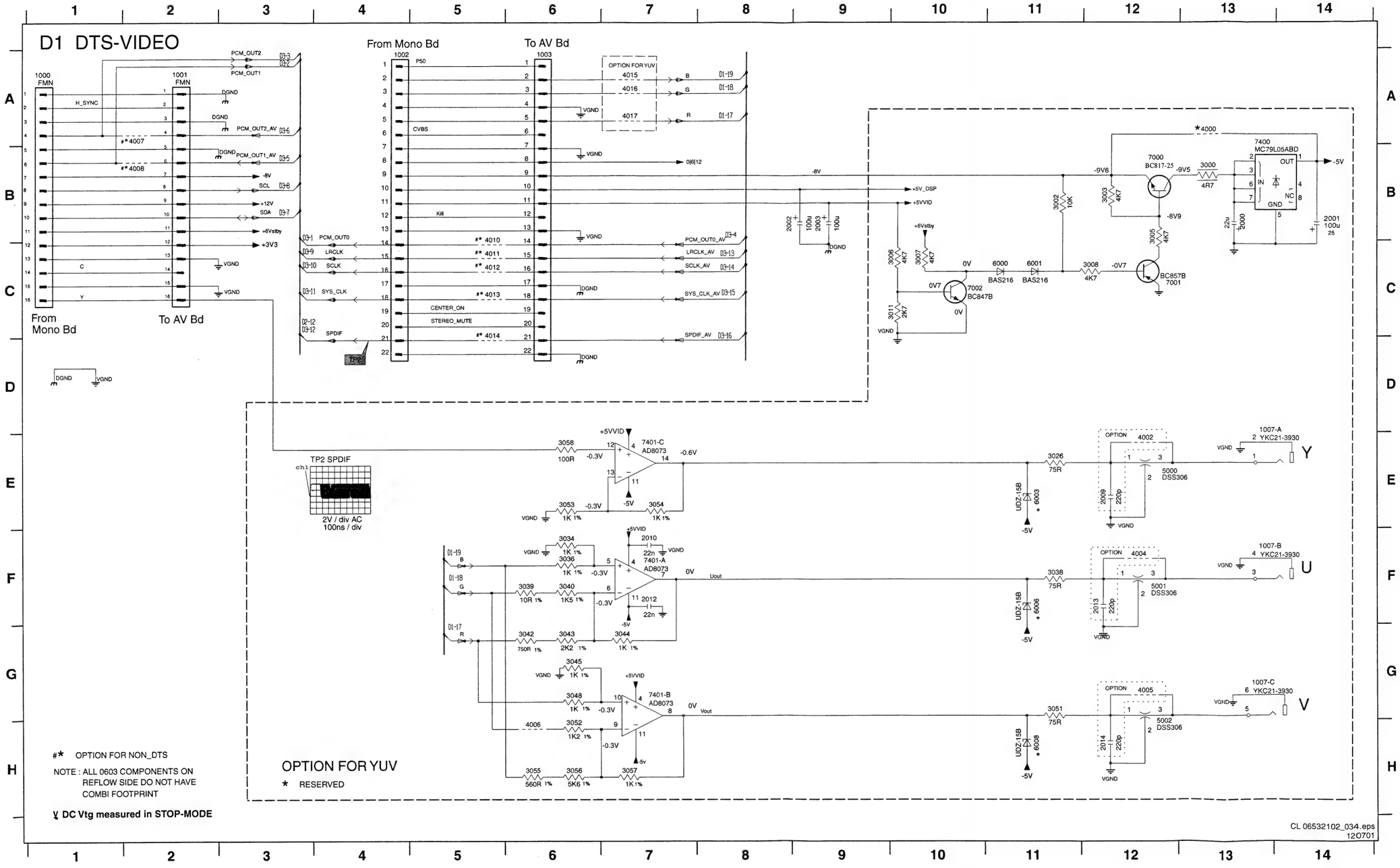

1000 A1 F030 B6
1001 A2 F031 B6
1002 A4 F032 B6
1003 A6 F033 B6
1007-A D13 F034 B5
1007-B F13 F035 B6
1007-C G13 F036 B6
2000 B13 F037 C6
2001 B14 F038 C6
2002 B8 F039 C6
2003 B9 F040 C6
2009 E12 F041 C5
2010 F7 F042 C5
2012 F7 F043 C6
2013 F12 F044 D6
2014 H12 F045 C5
3000 B13 I022 B14
3002 B11 I029 E13
3003 B12 I030 E13
3005 B12 I031 F13
3006 C10 I032 F13
3007 C10 I033 G13
3008 C12 I034 H13
3011 C10 I036 E11
3026 E11 I037 F11
3034 F6 I038 G11
3036 F6 I039 C9
3038 F11 I040 C10
3039 F6 I041 C11
3040 F6 I042 B12
3042 G6
3043 G6
3044 G6
3045 G6
3048 G6
3051 G11
3052 H6
3053 E6
3054 E7
3055 H6
3056 H6
3057 H7
3058 E6
4000 A13
4002 E12
4004 F12
4005 G12
4006 H6
4007 A2
4008 B2
4010 C5
4011 C5
4012 C5
4013 C5
4014 D5
4015 A7
4016 A7
4017 A7
5000 E12
5001 F12
5002 H12
6000 C11
6001 C11
6003 E11
6006 F11
6008 H11
7000 B12
7001 C12
7002 C10
7400 A13
7401-A F7
7401-B G7
7401-C E7
F000 A1
F001 B1
F003 A2
F004 A2
F005 A2
F006 A2
F007 A2
F008 B2
F009 B2
F010 B2
F011 B2
F012 B2
F013 B2
F014 B2
F015 C2
F016 C2
F017 C2
F018 C2
F019 B5
F020 C5
F021 C5
F022 C5
F023 A5
F024 A6
F025 A6
F026 A6
F027 A6
F028 A5
F029 A6

DTS DA I/O

D2 DTS_DAI0

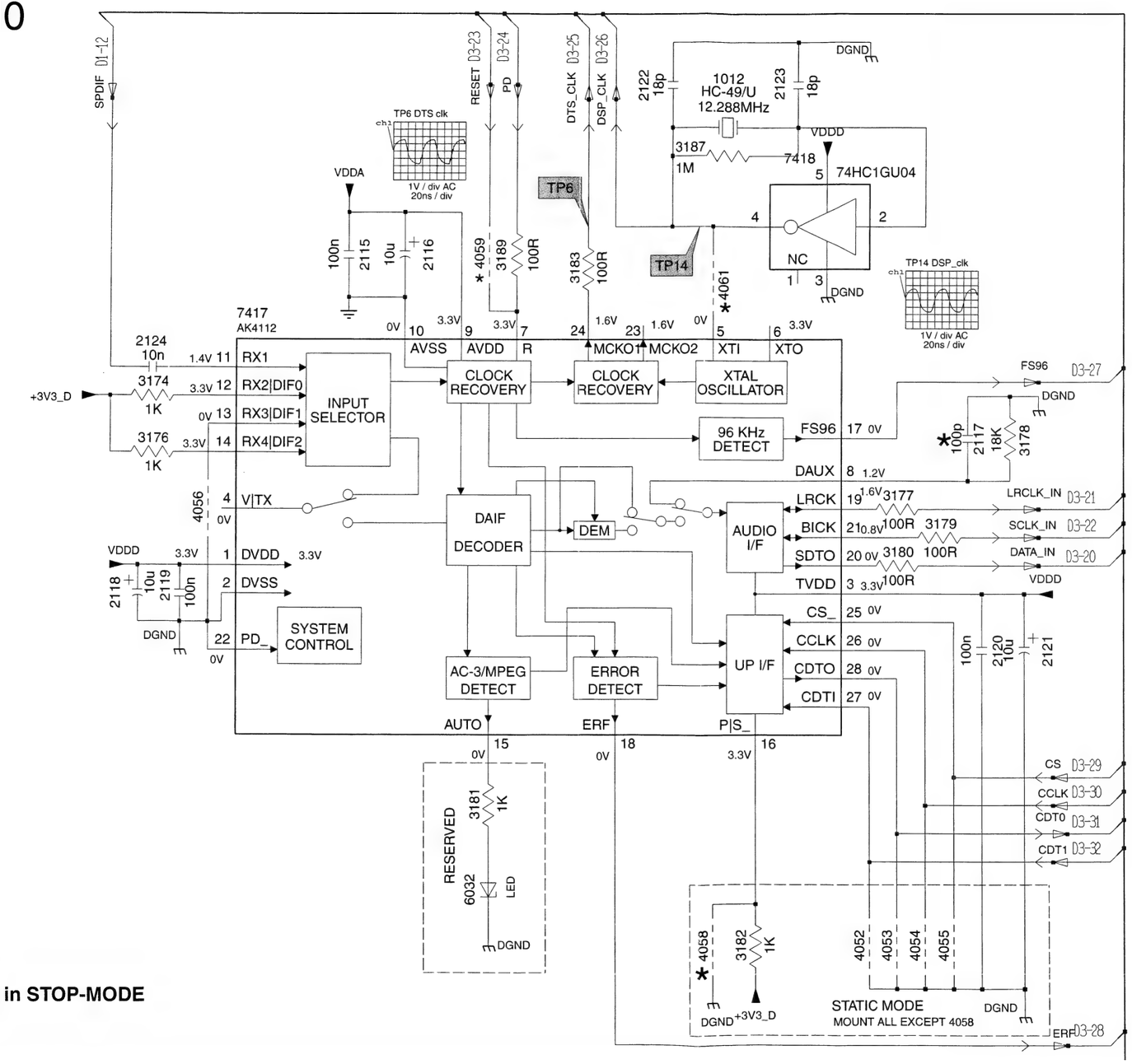

* RESERVED

V DC Vtg measured in STOP-MODE

CL 06532102_035.eps
120701

1012 A5
2115 B3
2116 B4
2117 C7
2118 C2
2119 C3
2120 D7
2121 D7
2122 A5
2123 A6
2124 B2
3174 B2
3176 C2
3177 C6
3178 C7
3179 C6
3180 C6
3181 D4
3182 E5
3183 B5
3187 A5
3189 B4
4052 E6
4053 E6
4054 E6
4055 E6
4056 C3
4058 E5
4059 B4
4061 B5
6032 E4
7417 B3
7418 A6
I090 A6
I091 A5
I092 A5
I094 C2

DTS Decoder

D3 DTS-DECODER

POWER INPUT (VCC) | Clock and PLL | JTAG / OnCE Port | External Bus Control

PORT A External Address Bus

PORT B Host Interface (HDIO8) Port

PORT C Enchanced Serial Audio Interface (ESAI)

PORT D Digital Audio Transmitter (DAX)

Interupt / Mode Control

Serial Host Interface (SHI)

POWER INPUT (GND) | PORT A External Data Bus

TP3/7 SCLK_in/out — 1V / div AC, 100ns / div

TP4/8 LRCLK_in/out — 1V / div AC, 5us / div

TP5 Data_in — 1V / div AC, 1us / div

DTS_ON :
HIGH : DTS
LOW : NON-DTS

I²C ADDRESS
ADDR $B8 : Mount only 4032 & 3115

BOOT UP MODE
MOUNT ONLY 4028, 4029, 3112 & 4031

* RESERVED

PPI INTERFACE

** RESERVED FOR PES

VDC Vtg measured in STOP-MODE

TP 11 : DTS decoder IC DSP56366 I2S output : PCM Out 2

CL 06532102_036.eps 120701

1010 H8 4028 H1
1011 H8 4029 H1
1101 C12 4030 H1
2030 A6 4031 H1
2031 A6 4032 F2
2032 A12 4033 I11
2033 A13 4034 I11
2034 A2 4035 H9
2035 A2 4036 F11
2036 A12 4037 F2
2037 A12 4039 D11
2038 A12 4040 D11
2039 A13 4100 D10
2040 A13 5003 B11
2041 A11 6100 A11
2042 B11 6101 G12
2043 B11 6102 A12
2044 B11 7405 G11
2045 B12 7406 B2
2046 B12 7407 C13
2047 B12 7408 E13
2048 B12 7409 A10
2049 B12 7410 A11
2050 B13 I050 A6
2051 B13 I054 A7
2052 B13 I055 A7
2053 B13 I056 A13
2054 B13 I057 A13
2055 B14 I058 A13
2056 B14 I059 A13
2057 B14 I060 A13
2058 B14 I061 B14
2059 C11 I062 B12
2060 C11 I063 D2
2062 D13 I064 D2
2063 E13 I065 E2
2064 F10 I066 E2
2065 F10 I067 F1
2066 F10 I068 F2
2067 G10 I069 E2
2068 G10 I070 G5
2069 G11 I071 B10
2070 H12 I072 B10
2071 D2 I073 B10
2072 D2 I074 C10
2150 E14 I075 D10
2151 E14 I076 D10
2152 E14 I077 D10
2153 E14 I078 E10
2154 G14 I079 C12
2155 G14 I080 D12
2156 G14 I081 E10
2157 G14 I082 E10
3070 A6 I083 F10
3071 I9 I084 F10
3072 A7 I085 F10
3073 A7 I086 H7
3074 A7 I087 H8
3075 A8 I088 I8
3076 A8 I089 E9
3077 A7 I100 H9
3078 A7 I101 E10
3079 A8 I102 F14
3080 A8 I103 E2
3081 A8 I104 D9
3086 B11
3092 C10
3096 C10
3098 C9
3099 G13
3100 G13
3101 G12
3102 I12
3103 I12
3104 D10
3105 E10
3106 H1
3107 H1
3108 E2
3109 E9
3110 E2
3111 H2
3112 H2
3113 E10
3114 E9
3115 F2
3116 F10
3117 F2
3118 F9
3119 F10
3120 F9
3145 D12
3146 D12
3147 E12
3148 E12
3149 E12
3150 D13
3151 D13
3152 E13
3153 E13
3154 F12
3155 F12
3156 F13
3157 F13
3160 H8
3162 H8
3163 B9
3164 B10
3165 B9
3166 C10
3188 A6
3200 F2
4020 A11
4021 A11
4023 A11
4024 A11
4025 A3
4027 A6

Layout DTS Panel (Top View)

1000 A4	2002 A1	2060 B6	2118 D9	3058 B4	3098 B7	3119 B7	3156 B9	3183 C10	4029 C9	6101 A10
1001 B4	2003 C5	2062 A8	2121 C9	3070 D7	3101 A10	3145 B8	3157 B9	3188 C9	4030 C9	6102 D5
1002 A6	2010 C3	2063 A8	2150 A8	3071 A11	3102 A10	3146 B8	3160 A11	3189 B7	4032 C9	7001 A4
1003 B6	2012 B3	2065 B8	2151 A8	3073 C7	3103 A10	3147 A8	3162 A10	3200 C9	4035 A10	7400 B3
1007 D4	2030 C7	2066 B8	2152 B8	3074 D7	3106 C9	3148 A8	3163 C7	4007 B4	4036 B9	7405 B10
1010 A10	2031 C7	2068 B8	2153 B8	3077 D7	3109 B8	3149 A8	3164 C7	4008 B4	4037 B8	7406 C8
1011 A10	2032 C6	2069 B8	2156 B9	3078 C7	3112 C9	3150 B8	3165 C7	4010 A8	4056 C10	7408 A9
1012 D10	2033 C5	2070 B10	2157 B9	3079 C7	3113 B8	3151 B8	3166 B7	4015 A7	5000 D4	7409 B5
1101 B9	2036 D6	2071 B9	3002 A4	3080 D7	3114 B8	3152 A8	3177 C10	4016 A7	5001 D4	7410 C5
2000 A2	2042 B6	2072 C9	3036 C3	3092 B7	3116 B8	3153 A8	3180 C10	4017 A7	5002 D3	7417 C10
2001 B2	2059 D6	2116 D10	3048 B3	3096 B8	3118 B7	3154 B9	3181 B10	4027 C6	6032 B10	7418 D10

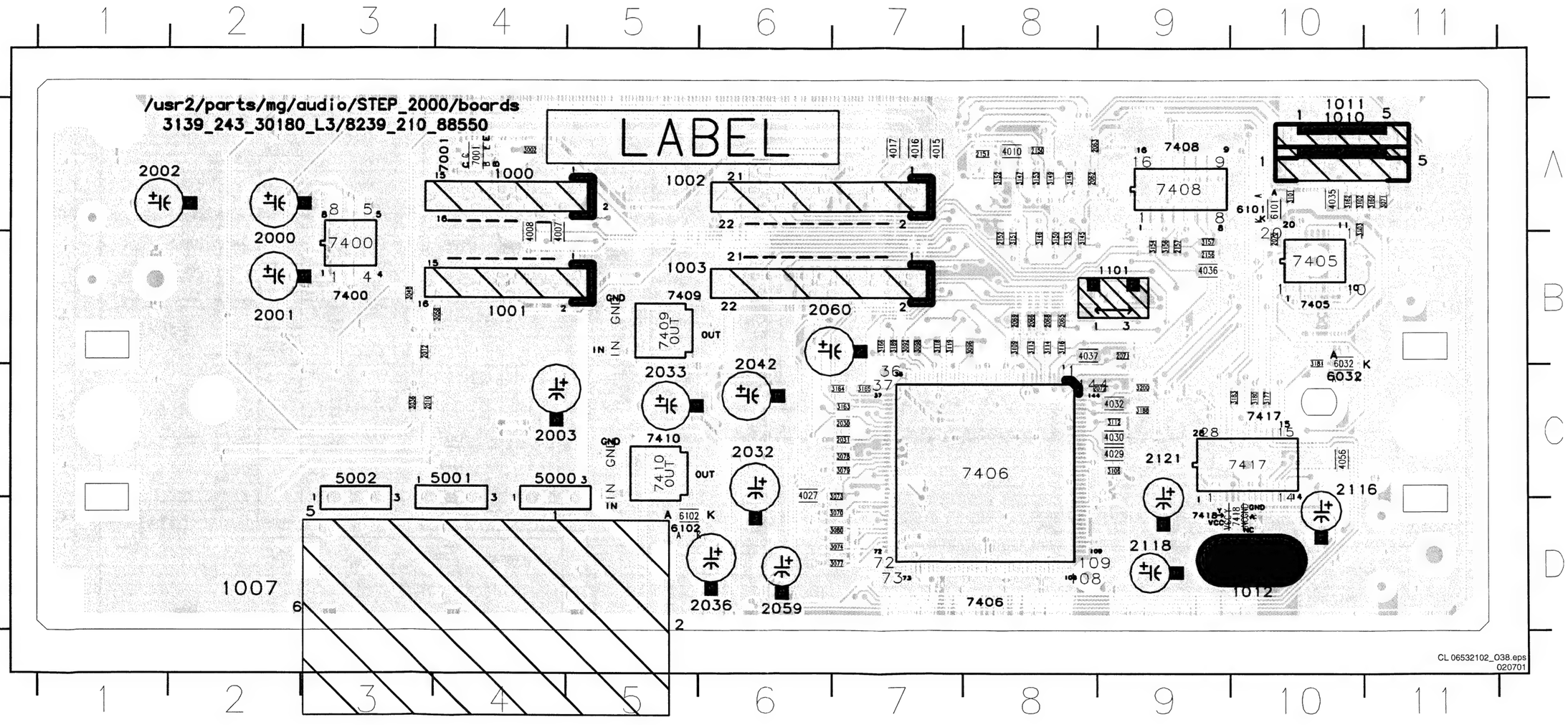

Layout DTS Panel (Bottom View)

2009 D8	2045 C5	2057 D4	2155 A2	3040 C9	3072 C3	3111 D3	4002 D8	4025 C5	4059 B6	7401 C9
2013 D9	2046 D5	2058 D4	3000 A9	3042 C9	3075 C5	3115 B4	4004 D9	4028 D3	4061 D3	7407 A4
2014 D9	2047 D5	2064 B4	3003 A9	3043 C9	3076 D5	3117 B4	4005 D9	4031 C3	4100 B5	
2034 C5	2048 C5	2067 B5	3005 A9	3044 C9	3081 D5	3120 C5	4006 B9	4033 A2	5003 B6	
2035 C5	2049 C4	2115 D2	3006 A7	3045 B9	3086 C6	3155 B5	4011 B4	4034 B1	6000 A7	
2037 C5	2050 C4	2117 C2	3007 A7	3051 C9	3099 A2	3174 C2	4012 B4	4039 B4	6001 A7	
2038 C4	2051 C5	2119 D3	3008 A8	3052 B9	3100 A3	3176 C2	4013 A4	4040 B3	6003 C7	
2039 D4	2052 D4	2120 C3	3011 A7	3053 B8	3104 B4	3178 C2	4014 B6	4052 B3	6006 C8	
2040 C4	2053 D4	2122 D3	3026 C8	3054 B8	3105 B4	3179 B2	4020 C6	4053 B3	6008 C10	
2041 C7	2054 D4	2123 D2	3034 C9	3055 B10	3107 C3	3182 B2	4021 C7	4054 B3	6100 D7	
2043 C6	2055 C4	2124 C2	3038 C9	3056 B9	3108 B3	3187 D2	4023 C6	4055 B2	7000 A9	
2044 C5	2056 D5	2154 A3	3039 C9	3057 B9	3110 C3	4000 A9	4024 C6	4058 B2	7002 A7	

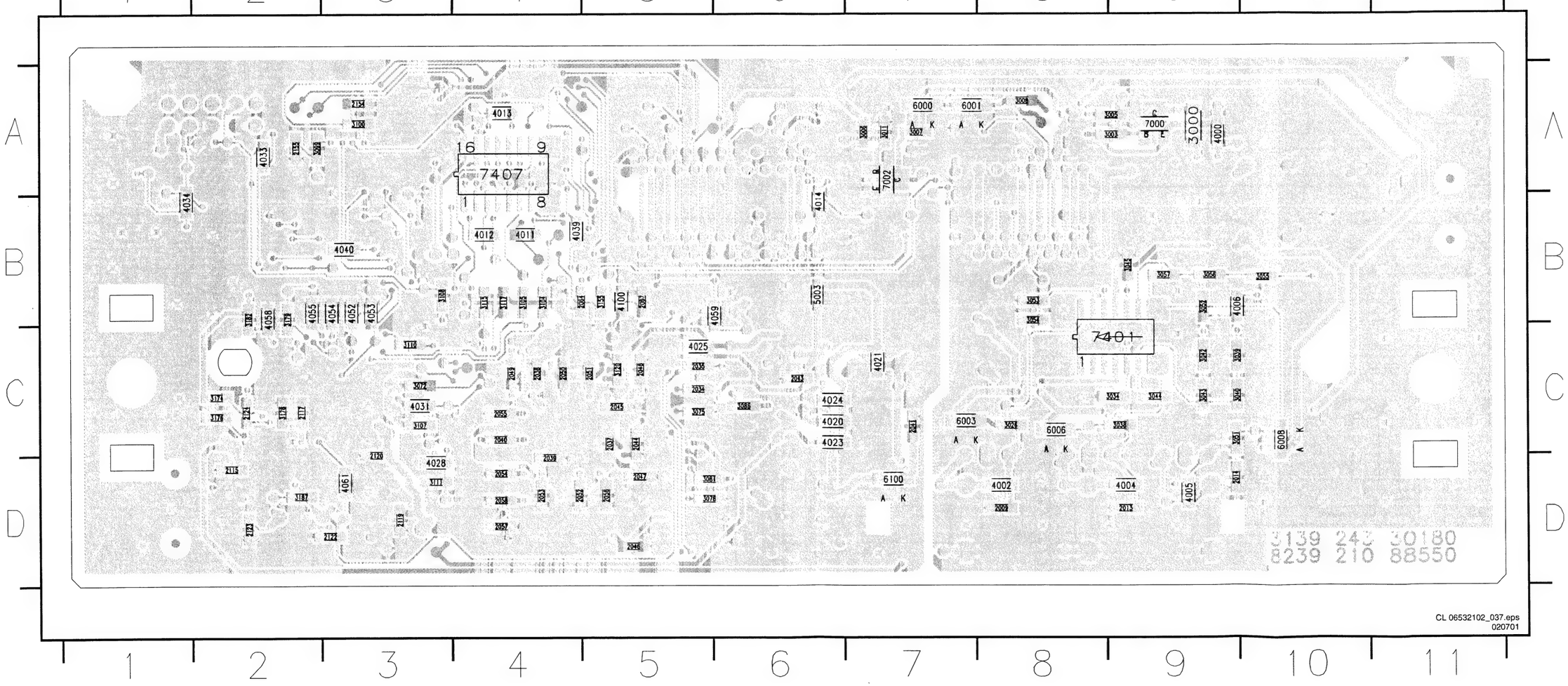

High Quality YUV

P2 High Quality YUV

V1 27M_CLK: 1V / div AC, 20ms / div
V2 Vsyncm: 2V / div AC, 10ms / div
V3 Hsync: 2V / div AC, 20us / div
V4 Vsync: 2V / div AC, 10ms / div
V11 Y_vid: 200mV / div DC, 20us / div

TO 1501 of MONO BOARD

TO 1118 of Control Panel

FROM 1506 of MONO BOARD

V12 U_vid: 100mV / div AC, 20us / div
V13 V_vid: 100mV / div AC, 20us / div
V14 Y_vid: 500mV / div AC, 20us / div
V15 U_vid out: 500mV / div AC, 20us / div
V16 V_vid out: 500mV / div AC, 20us / div

RESERVED

FOR PROGRESSIVE ONLY

DECOUPLING CAP FOR 7203

BARE BOARD 3139 243 30331

★ RESERVED

V DC vtg measured in STOP-MODE

CL 16532082_017.eps 120701

1002 D1
1003-A A13
1003-B C13
1003-C D13
1200 A1
1201 A2
1202 A3
2200 B6
2201 B6
2203 C6
2204 C6
2206 C6
2207 C6
2208 C6
2209 C1
2210 D5
2211 A13
2212 G10
2213 B9
2214 B10
2215 B11
2216 I10
2217 B13
2218 G2
2219 G3
2220 C9
2221 C10
2222 C11
2223 H10
2224 D13
2225 E9
2226 E10
2227 E11
2228 A10
2229 B13
2230 C13
2231 E13
2233 F12
2234 F11
2235 F12
2236 F12
2237 F11
2238 F12
2239 F13
2243 B5
2244 C1
2245 C1
3200 E7
3201 E7
3202 F5
3203 F5
3204 E6
3213 C5
3214 B1
3215 D5
3229 A13
3230 I10
3231 B8
3232 B9
3233 B11
3234 B11
3235 B11
3236 B12
3237 C13
3238 C8
3239 C9
3240 C11
3241 C11
3242 C11
3243 C12
3244 G10
3245 E8
3246 E13
3247 E8
3248 E9
3249 E11
3250 E11
3251 E11
3252 E12
3253 A11
3254 A10
3255 A11
3256 A12
3257 A11
4201 E8
4202 B3
4203 B3
4204 F5
4205 F5
4206 B12
4207 C12
4208 D12
4209 A5
4210 B5
5200 A5
5201 B5
5202 A10
5203 A10
5204 A11
5205 C10
5206 C10
5207 C11
5208 D10
5209 D10
5210 D11
6201 A11
7200-A G2
7201 A5
7205 E6
7204 A13
7205 C13
7206-A G3
7207 D13

ITEM NO	DESCRIPTION	DVDQ50 AP Progressive YUV	DVDQ50 EU High Quality YUV
2212	CER2 0603 X7R 16V 100N COL		X
2213	CER1 0603 NP0 50V 6P8 COL	X	
2213	CER1 0603 NP0 50V 27P COL		X
2214	CER1 0603 NP0 50V 22P COL	X	
2214	CER1 0603 NP0 50V 68P COL		X
2215	CER1 0603 NP0 50V 18P COL		
2216	CER2 0603 X7R 50V 1N COL		X
2218	CER2 0603 X7R 16V 100N COL	X	
2219	CER2 0603 X7R 16V 100N COL	X	
2220	CER1 0603 NP0 50V 6P8 COL	X	
2220	CER1 0603 NP0 50V 27P COL		X
2221	CER1 0603 NP0 50V 22P COL	X	
2221	CER1 0603 NP0 50V 68P COL		X
2222	CER1 0603 NP0 50V 18P COL	X	
2223	CER2 0603 X7R 50V 1N COL		X
2225	CER1 0603 NP0 50V 6P8 COL	X	
2225	CER1 0603 NP0 50V 27P COL		X
2226	CER1 0603 NP0 50V 22P COL	X	
2226	CER1 0603 NP0 50V 68P COL		X
2227	CER1 0603 NP0 50V 18P COL	X	
2229	CER1 0603 NP0 50V 100P COL		X
2230	CER1 0603 NP0 50V 100P COL		X
2231	CER1 0603 NP0 50V 100P COL		X
2232	CER2 0603 X7R 16V 100N COL	X	
2233	CER2 0603 X7R 16V 100N COL		X
2234	CER2 0603 X7R 16V 100N COL		X
2235	CER2 0603 X7R 16V 100N COL		X
2236	CER2 0603 X7R 16V 100N COL		X
2237	CER2 0603 X7R 16V 100N COL		X
2238	CER2 0603 X7R 16V 100N COL		X
2239	CER2 0603 X7R 16V 100N COL		X
3200	RST SM 0603 100R PM5 COL		X
3201	RST SM 0603 100R PM5 COL		X
3204	RST SM 0603 10K PM5 COL		X
3230	RST SM 0603 1K2 PM5 COL		X
3244	RST SM 0603 1K2 PM5 COL		X
3245	RST SM 0603 4K7 PM5 COL	X	
4204	RST SM 0603 JUMP. 0R05 COL		X
5202	FXDIND SM 0805 6U8 PM10 COL R	X	
5202	FXDIND SM 0805 22U PM20 COL R		X
5203	FXDIND SM 0805 10U PM10 COL R	X	
5203	RST SM 0805 JUMP. 0R05 COL R		X
5204	FXDIND SM 0805 2U2 PM10 COL R	X	
5204	FXDIND SM 0805 10U PM10 COL R		X
5205	FXDIND SM 0805 6U8 PM10 COL R	X	
5205	FXDIND SM 0805 22U PM20 COL R		X
5206	FXDIND SM 0805 10U PM10 COL R	X	
5206	RST SM 0805 JUMP. 0R05 COL R		X
5207	FXDIND SM 0805 2U2 PM10 COL R	X	
5207	FXDIND SM 0805 10U PM10 COL R		X
5208	FXDIND SM 0805 6U8 PM10 COL R	X	
5208	FXDIND SM 0805 22U PM20 COL R		X
5209	FXDIND SM 0805 10U PM10 COL R	X	
5209	RST SM 0805 JUMP. 0R05 COL R		X
5210	FXDIND SM 0805 2U2 PM10 COL R	X	
5210	FXDIND SM 0805 10U PM10 COL R		X
7200	IC SM 74LVT74DB (PHSE) R	X	
7203	IC SM ADV7190KST (ANA0) Y		X
7206	IC SM 74LVT86DB (PHSE) R	X	

Layout High Quality YUV (Top View)

1002	D4	2141	A2	2220	C9	3106	C3	3120	C4	3134	A4	3148	C6	3210	A8	3248	C9	4204	C8	5210	C10
1003	B11	2200	A7	2223	C9	3107	B3	3121	C4	3135	A4	3149	C6	3211	A9	3251	C9	4205	C8	7100	B5
1200	C2	2202	A9	2224	D10	3108	B4	3122	C4	3136	A4	3150	C6	3212	A9	3255	C10	4206	A10	7101	B2
1201	D3	2203	B7	2225	C9	3109	B4	3123	C4	3137	A4	3151	C6	3215	B6	3256	B9	4207	B10	7102	A2
1202	D8	2205	A9	2228	B9	3110	B4	3124	C4	3138	A4	3152	C6	3216	B9	3257	A9	4208	C10	7103	C2
2100	A2	2206	A9	2243	A6	3111	B3	3125	C4	3139	A4	3153	B6	3217	B9	3258	C6	5102	C6	7200	D6
2101	A3	2207	A7	2244	A9	3112	B3	3126	B3	3140	A4	3154	C6	3230	B9	4100	D6	5202	A9	7201	A6
2102	C3	2210	C7	2245	A3	3113	B3	3127	B3	3141	A4	3155	C5	3232	A9	4101	D6	5203	A9	7202	A8
2115	A5	2211	B10	3100	C3	3114	B4	3128	B4	3142	A4	3200	C8	3235	B9	4102	C6	5204	A10	7203	B8
2116	A5	2212	B9	3101	C3	3115	B4	3129	B4	3143	A5	3201	C8	3238	B9	4103	C6	5205	B9	7204	B10
2117	A5	2213	A9	3102	C3	3116	B4	3130	B3	3144	A5	3202	C8	3239	C9	4200	A8	5206	B9	7205	C10
2125	D5	2216	B9	3103	C3	3117	B3	3131	B3	3145	A5	3203	C8	3242	C9	4201	C8	5207	B10	7206	C6
2139	D6	2217	C10	3104	C3	3118	A3	3132	B4	3146	A5	3204	B8	3244	C9	4202	D8	5208	C9	7207	D10
2140	C2	2219	C7	3105	C3	3119	C4	3133	A4	3147	C6	3206	B8	3245	C8	4203	D8	5209	C9		

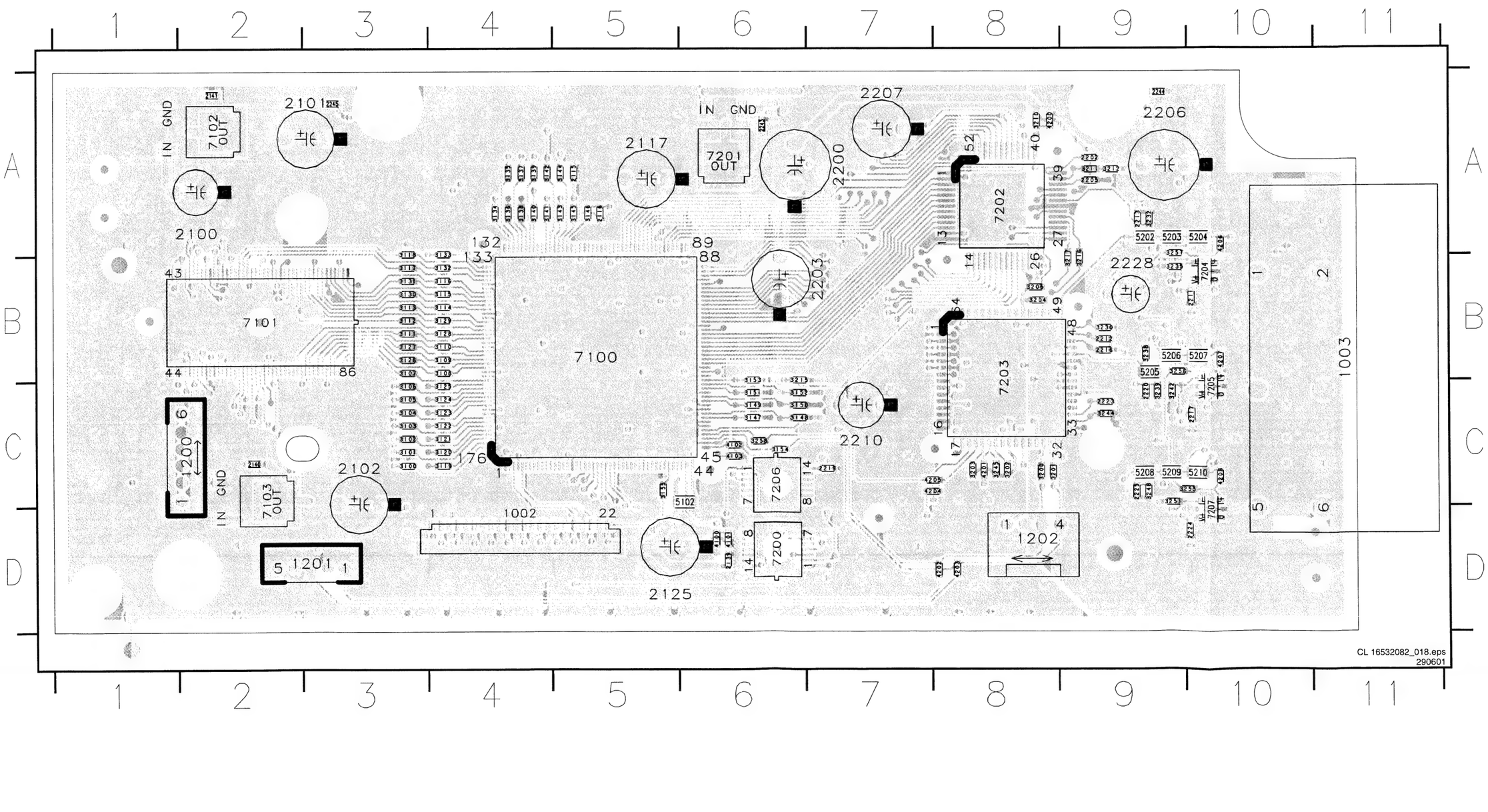

CL 16532082_018.eps
290601

Layout High Quality YUV (Bottom View)

2103 B10	2111 B10	2122 C7	2133 B7	2208 A3	2227 C2	2236 C4	3214 C11	3241 B2	3254 B3
2104 B10	2112 B10	2126 C8	2134 B7	2209 C11	2229 B2	2237 B3	3229 B2	3243 C3	4209 A6
2105 B10	2113 B10	2127 B8	2135 B7	2214 A3	2230 C2	2238 B4	3231 B3	3246 D2	4210 A6
2106 B10	2114 B10	2128 B8	2136 B7	2215 A2	2231 C2	2239 B4	3233 A2	3247 C3	5100 A10
2107 B9	2118 A7	2129 B8	2137 C7	2218 D5	2232 A4	2240 A4	3234 A2	3249 C2	5101 D9
2108 B9	2119 C7	2130 B8	2138 C8	2221 B3	2233 C4	2241 A4	3236 B2	3250 C2	5200 A6
2109 B9	2120 B7	2131 B7	2201 A6	2222 B2	2234 C4	2242 A4	3237 C2	3252 D3	5201 A6
2110 B9	2121 B8	2132 B7	2204 B6	2226 C3	2235 C4	3213 A5	3240 B2	3253 B3	6201 B3

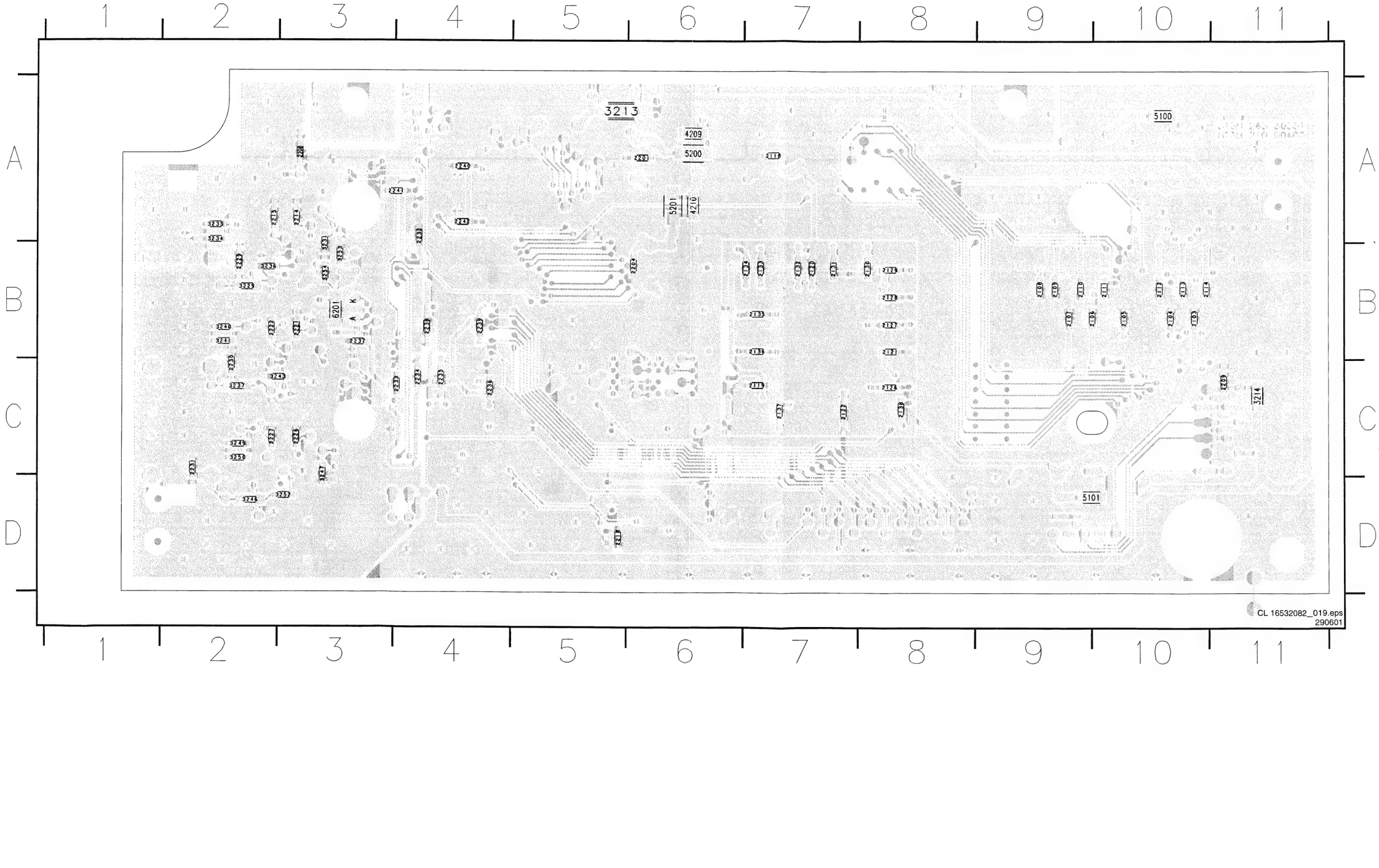

CL 16532082_019.eps
290601

Single SCART

SS SINGLE SCART

To 1301 of AV Board A3

1001 1 BLUE, 2, 3 GREEN, 4, 5 RED, 6, 7, 8, 9 L, 10 100n 2117 +5V, 11, 12 R, 13, 14 -5V, 15 CVBS, 16, 17, 18 0|6|12, 19 KILL, 20, 21, 22 P50

TP1 TP2 TP3

7100 LA7109

6 16 19 29 26 36 +VCC

-0V5	1	VIN1+	VOUT1	35	-1V2
0V	2	NFB1			
5V	3	MUTE1			
-0V5	4	VIN2+	VOUT2	33	-1V2
0V	5	NFB2	DR-CTL2	32	5V
-0V5	7	VIN3+	VOUT3	31	-1V2
0V	8	NFB3			
5V	30	MUTE4			
-0V3	11	VIN4+	VOUT4	25	-1V2
0V	12	NFB4			
5V	13	MUTE2			
	14	VIN5+	VOUT5	23	
0V	15	NFB5	DR-CTL1	22	5V
	17	VIN6+	VOUT6	21	
0V	18	NFB6			
5V	20	MUTE3			

NC 9 10 27 28 GND 24 34

2107 100u 2106 100n -5V 100n 2108 100u 2109 +5V 2100 100u 2101 100n

3104 75R 220p 2102 TP1A

3105 75R 220p 2103 TP2A

3106 75R 220p 2104 TP3A

3108 75R 2113 220p TP14

3101 220R 3102 220R

BC847B 7401 0V7 3100 2K7 0V

2114 220p TP25 SCART_R

TP25 SCART_L 2115 220p

3103 2K7 0V7 7402 BC847B 0V

BZX284-C15 6101 BLUE 0|6|12 2116 220p

BZX284-C15 6102

BZX284-C15 6103 GREEN 100p 2105

BZX284-C15 6104

BZX284-C15 6105 RED

-5V 4V9 0V2 3107 75R

7403 BC857B 4V9 2110 100u 2111 100n

+5V 3109 22K SCART_V

BZX284-C15 6106

3111 1K 4V9

3112 47K 0V1 7404 BC847B

3113 47K 7405 BC857B

3114 47K

2112 220p 6100 BZX284-C15 220R 3110

+5V 3115 4K7 7406 BC847B

1003 DIPMATE 1 2

1002 1 2 3 4 5 6 7 8 9 10 11 12 13 14 15 16 17 18 19 20 21

SCART

1001 B1
1002 A9
1003 A9
2100 B4
2101 B4
2102 B6
2103 C6
2104 C6
2105 C9
2106 A3
2107 A3
2108 A2
2109 A2
2110 C8
2111 C8
2112 D6
2113 C5
2114 A8
2115 A9
2116 B9
2117 C1
3100 A7
3101 A6
3102 A6
3103 B7
3104 B5
3105 B5
3106 C5
3107 C8
3108 C5
3109 D7
3110 D6
3111 D8
3112 E7
3113 D4
3114 D5
3115 E4
6100 D6
6101 B7
6102 B7
6103 B8
6104 C7
6105 C7
6106 D7
7100 B3
7401 A6
7402 B8
7403 C7
7404 E8
7405 D5
7406 E5

V DC vtg measured in STOP-MODE

BARE BOARD 3139 243 30340

CL 16532082_014.eps 120701

TP1 B_VID in — ch1 — 200mV / div AC, 20us / div

TP1A B_VID out — ch1 — 500mV / div AC, 20us / div

TP2 G_VID in — ch1 — 200mV / div AC, 20us / div

TP2A G_VID out — ch1 — 500mV / div AC, 20us / div

TP3A R_VID in — ch1 — 200mV / div AC, 20us / div

TP3A R_VID out — ch1 — 500mV / div AC, 20us / div

TP4 CVBS — ch1 — 200mV / div AC, 20us / div

TP14 CVBS-out — ch1 — 500mV / div AC, 20us / div

TP25 Audio Pinknoise out — 200mV / DIV AC, 10ms / DIV

Layout SCART Board (Top View)

1001	B2	2107	C9	9300	A3	9304	B4	9308	D6	9312	E8
1002	F6	2109	B10	9301	C3	9305	C4	9309	D4	9313	C9
1003	E10	2110	E1	9302	C2	9306	B4	9310	E3	9314	B5
2100	C6	3102	D7	9303	D1	9307	C4	9311	E8		

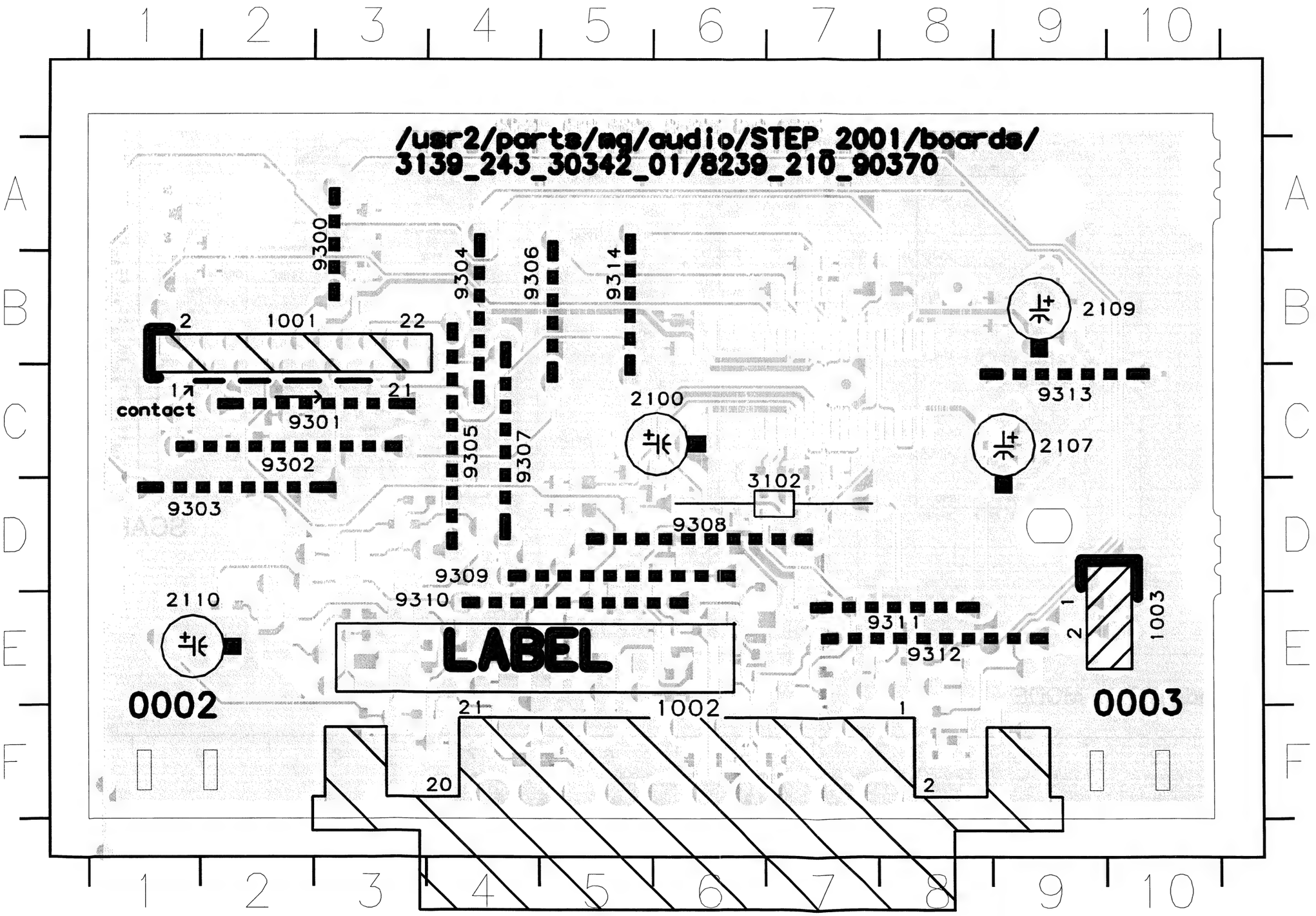

Layout SCART Board (Bottom View)

2101	C4	2112	D4	3103	E3	3111	E8	4305	B2	4313	F7	6102	E5	7403	E8
2102	E4	2113	E7	3104	D5	3112	E9	4306	C4	4314	F5	6103	D6	7404	E9
2103	E5	2114	F3	3105	E5	3113	D8	4307	C6	4315	F5	6104	E6	7405	D8
2104	E6	2115	E4	3106	E6	3114	D8	4308	B3	4316	D5	6105	E6	7406	E8
2105	E5	2116	E5	3107	F7	3115	E7	4309	B4	4317	A8	6106	E7		
2106	C2	2117	C9	3108	E7	4300	B9	4310	D6	4318	B5	7100	C4		
2108	B4	3100	E3	3109	E8	4302	B8	4311	D6	6100	E5	7401	F3		
2111	F8	3101	F3	3110	E5	4303	B4	4312	D5	6101	E4	7402	E3		

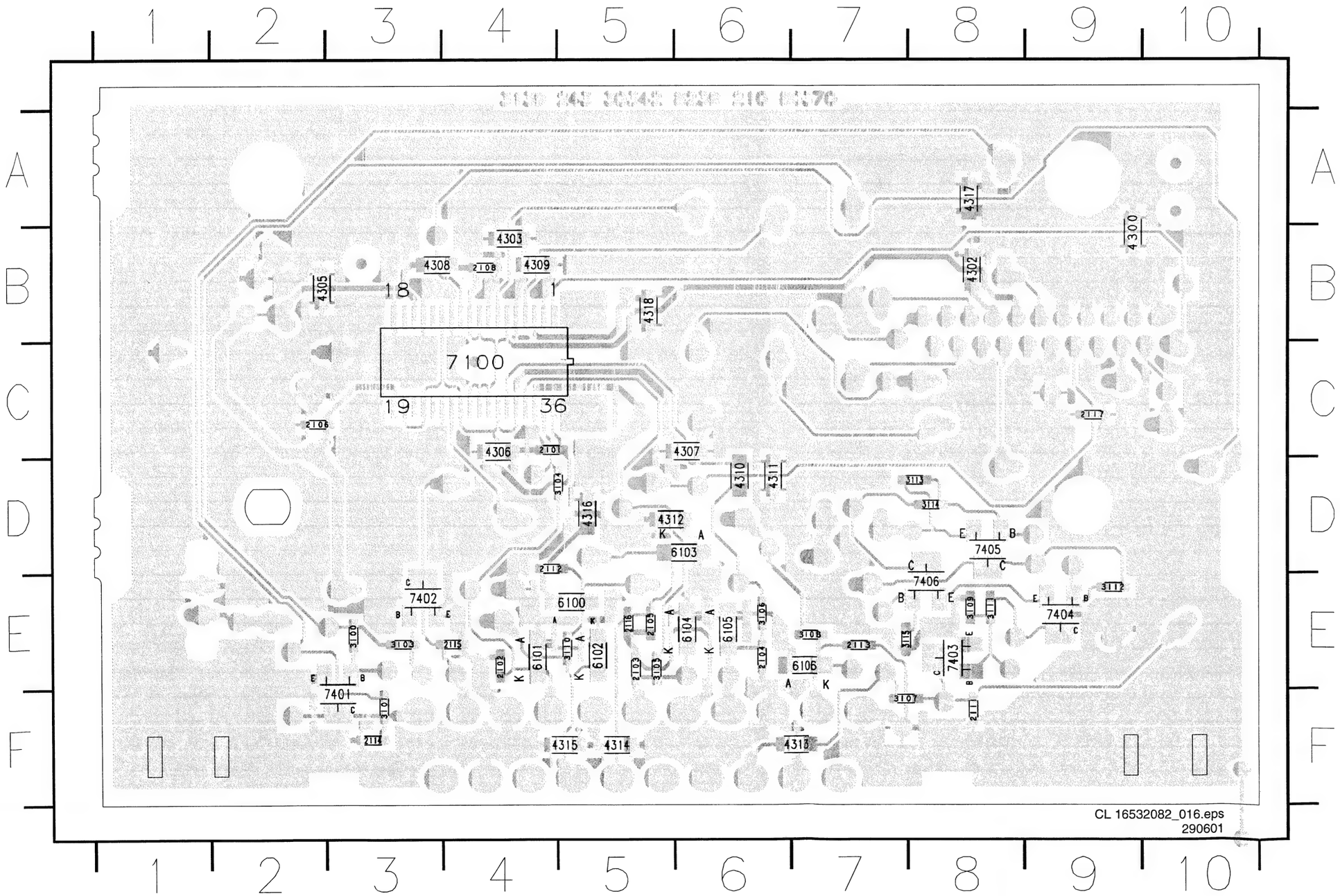

CL 16532082_016.eps
290601

Personal Notes:

Personal Notes:

8. Alignments

No electrical alignments available

9. Circuit Descriptions and List of Abbreviations

9.1 Index

9.1.1 Index
9.1.2 Introduction
9.1.3 Power Supply
9.1.4 Loader/Monoboard
9.1.5 Data Processing
9.1.6 Control and Display
9.1.7 Abbreviations

Notes:
- Figures can deviate slightly from the actual situation, due to different set executions.
- For a good understanding of the following circuit descriptions, please use the diagrams in chapter 6 and 7. Where necessary, you will find a separate drawing for clarification.

9.2 Introduction

9.2.1 Features

The Step2001 range is a 3rd generation DVD player. It contains many new features, such as:
- MP3 playability,
- Digital Crystal Clear,
- DTS decoding,
- Progressive/High Quality YUV,
- Component video out,
- Smart picture,
- Zoom + perfect still,
- Disc lock,
- 5 Disc resume,
- CD-RW compatible.

9.2.2 Differences

The Step2001 has, compared to its predecessor the Step2000, a new DVD module called the SD3.x.
The main difference between the SD1/2 and the SD3 is the new main DVD processor (Sti5508/STi5580), which has enhanced audio features like MP3, colour setting, NTSC/PAL conversion and DTS decoder (only for STi5580).

All A/V functional requirements are the same as for the DVD 2B except for:
- no YUV matrix, colour setting IC, Karaoke IC and headphone,
- a new audio DAC, SCART board and Progressive Scan board,
- a re-used A/V board (however some models have a new Front Audio DAC).

All display functional requirements are the same as the DVD 2B except for:
- a new LCD display.

9.2.3 Modules

The main modules are:
- Power Supply Unit (PSU).
- SD3.x DVD module (Loader VAL6011 + Monoboard).
- Digital Theatre Sound (DTS) Board (only for SD3.0 with host processor Sti5508).
- Audio Video / (A/V) Board.
- Display/Control Board.
- SCART Board (only for Europe).
- Progressive Scan Board (only for Q50).

Note:
There are two different SD3.x executions:
- SD3.0 refers to DVD module with host processor Sti5508 and
- SD3.1 refers to DVD module with host processor Sti5580.

9.2.4 Service

This SD3.x has the same ComPair connector as in all previous DVD generations.
Flashing of the application SW is now possible with the ComPair cable and a CDR disc (except for sets with Mask-ROM software).

9.3 Power Supply

Note: There are two different Power Supply modules used, due to different suppliers (Billion or EPM). The 'Billion' module is used in AP and USA players, while the 'EPM' module is used for the other regions.
Both modules are described separately.

9.3.1 'Billion' Power Supply Module (3139 248 70851)

Introduction
This supply is a Switching Mode Power Supply (SMPS), which uses the control IC UC3842 to produce pulses to drive the power 'switch' (MOSFET). The regulation of the 'duty cycle', controls the supply output, at a fixed switching frequency (approximately 58 kHz, determined by the RC timing components at pin 4).

The UC3842 (item IC1) is a high performance, fixed frequency, current mode controller for DC-to-DC converter applications. This integrated circuit features:
- a trimmed oscillator for precise duty cycle control,
- a temperature compensated reference,
- a high gain error amplifier,
- a current sensing comparator and
- a high current totem pole output ideally suited for driving a power MOSFET (item Q1).

Also included are protective features consisting of input and reference under-voltage lockouts each with hysteresis, cycle by cycle current limiting, programmable output dead time and a latch for single pulse metering.

Output Voltages
- +12V_stdby (present during standby).
- +5V_ stdby (present during standby).
- +5V_digital (will switch off via Q3 during standby).
- +5V_AV (will switch off via Q3 during Standby).
- 3V3 (present during standby).
- -5V (will switch off during standby).

Operation

POWER SUPPLY

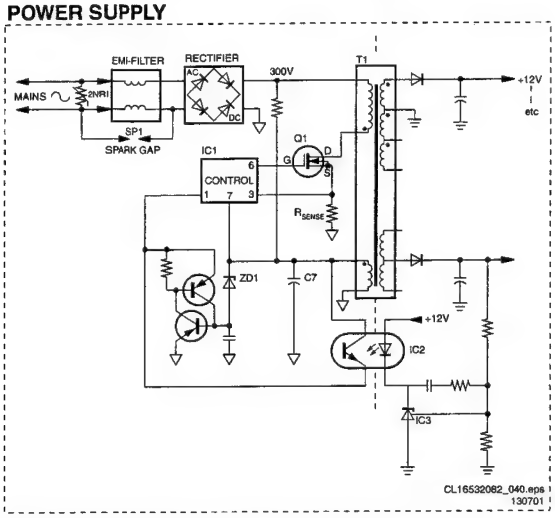

Figure 9-1

Mains Input Circuit
The bridge rectifier (D1-D4) rectifies the mains voltage, after which C5 smoothens this voltage. The DC voltage across this capacitor is the DC input voltage (approximately 300 V), to pin 1 of transformer T1.
The mains input also consists of a (differential mode) lightning protection ZNR1 and a (common mode) lightning protection SP1 (spark gap).

Start-up and Take-over Circuitry
With the mains voltage input, C7 will charge. When this voltage (at pin 7 of IC1), reaches the start-up threshold of min. 14.5V, the control circuit starts to operate.
After start-up, IC1 requires a sinking current, which the start-up circuitry cannot deliver. Therefor a take-over circuitry (a coupled winding of transformer T1) is present. The voltage at this point will take over the supply voltage at pin 7 of the IC. If the take-over circuit does not function, the IC will switch off again at the minimal operating voltage of 8.5 V. The whole operation cycle will repeat itself with audible hiccup sound if take-over is not present.

Secondary Voltage Sensing
The secondary voltage regulating circuit comprises of opto-coupler IC2 (which isolates the error signal from the control IC on the primary side), and a reference component IC3 (TL431).
The reference component has two functions:
- a very stable and accurate reference diode
- a high gain amplifier.

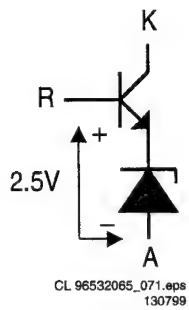

Figure 9-2

When the output voltage increases (due to a reduction in the load), the voltage across R23 increases to above the internal reference voltage of 2.5 V. IC3 will conduct and the current through the opto-coupler will increase. This results in an increase of the voltage at pin 2 of IC1, which will reduce the on time of FET Q1.
In the event of an output voltage decrease (due to an increase in the load), the control circuit will operate in the opposite way.

Primary Current Sensing
The current through FET Q1, will result in a voltage drop across R3A (R_{SENSE}). This line goes to pin 3 of IC1, which is the current sense input. The higher the input voltage, the more the primary current is limited. In this way, the maximum output power of the power supply is limited.

Under-voltage Protection
Two under-voltage lockout comparators are incorporated, to guarantee that IC1 is fully functional before the output stage is enabled. Separate comparators with built-in hysteresis, monitor both the supply voltage at pin 7 and the reference voltage at pin 8.
If the supply voltage at pin 7 drops below 10 V (typical) e.g. due to a shorted secondary voltage or excessive load, the drive pulse at pin 6 is disabled and the controller will switch 'off'.

Over-voltage Protection
The over-voltage circuitry (ZD1, Q7, and Q8) is used to detect an over-voltage situation on the secondary side of the transformer.
If, after start-up, the voltage at the zenerdiode ZD1 will exceeds its zener voltage, the internal latch circuit is triggered (via pin 1), the output buffer is disabled, and the SMPS goes into over-voltage protection. Now a complete restart sequence is required.
Note: If the event of the over-voltage situation remains present, the SMPS will go in sequence of protection, start-up, protection and the cycle repeats. This effect is highly audible.

9.3.2 'EPM' Power Supply Module (3122 427 22930 or 22930)

Introduction
This supply is a Switching Mode Power Supply (SMPS), which uses the control IC TY720xx to produce pulses to drive the power 'switch' (MOSFET). The TY720xx (item 7101) is a high performance, current mode controller for DC-to-DC converter applications.
The operation frequency varies with the circuit load. When the output power demand decreases, the switching frequency raises, with a maximum frequency of 125 kHz (determined by C2107 at pin 5). At this point, the internal VCO takes over and starts to decrease the switching frequency.
This has some benefits compared to a 'fixed frequency' flyback converter. The efficiency is better, which results in a lower power consumption.
Note: See diagram in chapter 7.

Output Voltages
- +12V_stdby (present during standby).
- +5V_ stdby (present during standby).
- +5V_digital (will switch off via TS7221 during Standby).
- +5V_AV (will switch off via TS7221 during Standby).
- 3V3 (present during standby).
- -5V (will switch off during standby).

Operation

Mains Input Circuit
The bridge rectifier (D6112-D6115) rectifies the mains voltage, after which C2121 smoothens it. The DC voltage across this capacitor is the DC input voltage (approximately 300V), to pin 2 of transformer T5131 and IC7101.

The mains input also consists of a (differential mode) lightning protection R3120 and a (common mode) lightning protection 1121/1122 (spark gap).

Start-up Circuitry
The rectified voltage from the bridge rectifier is connected to pin 1 via R3116. This voltage will charge the V_{CC} capacitor (C2102). When this voltage, (at pin 13 of 7101), reaches the start-up threshold of min 15 V, the control circuit starts to operate.
After start-up, IC 7101 requires a sinking current, which the start-up circuitry cannot deliver. Therefor a take-over circuitry (a coupled winding of transformer L5131) is present. The voltage at this point will take over the supply voltage at pin 13 of the IC.
If the take-over circuit does not function, the IC will switch off again at the minimal operating voltage of +8 V. The whole operation cycle will repeat itself with audible hiccup sound if take-over is not present.

Secondary Voltage Sensing
The secondary voltage regulating circuit comprises of opto-coupler 7102 (which isolates the error signal from the control IC on the primary side), and a reference component 7201 (TL431).
The reference component has two functions:
- a very stable and accurate reference diode
- a high gain amplifier.

When the output voltage increases (due to a reduction in the load), the voltage across R3205+R3206 increases to above the internal reference voltage of 2.5 V. Item 7201 will conduct and the current through the opto-coupler will increase. This results in an increase of the voltage at pin 4 of 7101, which will reduce the on time of FET 7125. In the event of an output voltage decrease (due to an increase in the load), the control circuit will operate in the opposite way.

Primary Current Sensing
The current through FET 7125, will result in a voltage drop across R3126/27/28 (R_{SENSE}). This line goes to pin 11 of 7101, which is the current sense input. The higher the input voltage, the more the primary current is limited. In this way, the maximum output power of the power supply is limited.

Under-voltage Protection
If the supply voltage at pin 13 drops below 7.2 V (typical), e.g. due to a shorted secondary voltage or excessive load, the drive pulse at pin 6 is disabled and the controller will switch off.

Over-voltage Protection
An internal over-voltage protection circuitry continuously monitors the V_{CC} pin.
If, after start-up, this voltage exceeds 40 V, the internal latch circuit is triggered, the output buffer is disabled, and the SMPS goes into over-voltage protection. Now a complete restart sequence is required.
Note: If the event of the over-voltage situation remains present, the SMPS will go in sequence of protection, start-up, protection and the cycle repeats. This effect is highly audible.

9.4 Loader/Monoboard

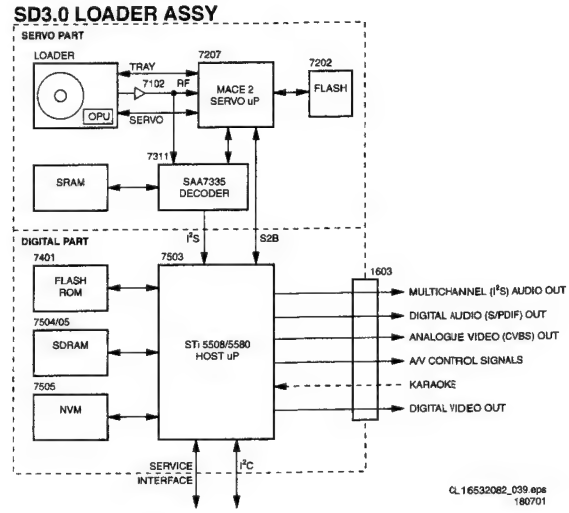

Figure 9-3

9.4.1 The Servo Part

The Optical Unit
The optical unit consists of two lasers, one for CD with a wavelength of 780 nm, and one for DVD with a wavelength of 650 nm. The TZA1033 (item 7102) controls the data from these lasers, and the supply to them.

The Signal Processor TZA1033
The TZA1033 (or DVDALAS2) is an analogue pre-processor and laser supply circuit. It contains data amplifiers and several options for radial tracking and focus control.
It is possible to optimise the dynamic range of this pre-amp/processor combination for the LF servo and RF data paths. The gain in both channels is separately programmable. This will guarantee an optimal playability for all kind of discs.
Also a dual laser supply is implemented, with fully automatic laser control including stabilisation and an ON/OFF switch, plus a separate supply pin for power efficiency.
The servo signals go to the MACE2 servo processor, while the HF output signal, goes to the SAA7335 decoder (item 7311).

The Decoder SAA7335
The SAA7335 (item 7311) is a high-end combined Compact Disc (CD) and Digital Versatile Disc (DVD) compatible decoding device. The device operates with an external 32 Kb SRAM for DVD error correction and de-interleaving operations.
This IC decodes EFM or EFM+HF signals directly from the laser pre-amplifier, including analogue front-end, PLL data recovery, demodulation and error correction.

The analogue front-end input converts the HF input to the digital domain via an 8-bit ADC, proceeded by an AGC circuit to obtain the optimum performance from the converter. An external resonator clocks this block. This subsystem recovers the data from the channel stream. It corrects asymmetry, performs noise filtering and equalisation and finally recovers the bit clock and data from the channel using a digital PLL.
The demodulator part detects the frame synchronisation signals and decodes the EFM (14 bit) and EFM+ (16 bit) data and sub-code words into 8 bit symbols. Via the serial output interface, the I^2S data (audio and video) go to the DVD decoder Sti5508.

The spindle-motor interface provides both motor control signals from the demodulator and, in addition, contains a tachometer loop that accepts tachometer pulses from the motor unit. They drive the motor IC (item 7304).
The SAA7335 has two independent microcontroller interfaces. The first is a serial I^2C-bus and the second is a standard 8-bit multiplexed parallel interface. Both of these interfaces provide access to a total of 32 8-bit registers for control and status.

The Servo Processor MACE2

The servo circuit in the MACE2 IC (item 7207), takes care of the servo controls. In a CD system, there are some 12 control loops active. About six of them are needed to adjust the servo error signals, that is once per disc rotation. It also adjusts offsets, signal amplitudes and loop gains (AGCs), to enlarge system robustness and to avoid expensive potentiometer adjustments in production.
The other six loops determine the laser spot position on the disc in the radial, axial (focus) and tangential directions.
It also has to take care that the spot accesses a required position as fast as possible. This access system consists of two parts, namely the actuator and the sled, which are (within a certain range) mechanically and electrically independent. So during an access, the servo has to control as well the actuator as the sled.
The analogue signals from the diode pre-processor are converted into a digital representation using A/D converters. For the communication between the host processor (Sti5508) and the servo processor the S2B bus is used, this supports full-duplex asynchronous communication.
Note: For an extensive description of the MACE2 IC, see Service Manual 3122 785 11010.

9.4.2 The Digital Part

The Host Processor Sti5508/Sti5580

The Sti5508/Sti5580 host processor is the successor of the Sti5505. It works on 2.5 V and 3.3 V. The Sti5580 is the high-end version with DTS and DVD-audio capability. It comprises the following functions:

- video decoder which supports MPEG1 and MPEG2
- audio decoder which supports AC-3, MPEG1, MPEG2, PCM, DTS, DVD-audio, 6-channel, virtual surround
- PAL/NTSC video encoder with simultaneously Y/C, CVBS and RGB/YUV outputs
- PAL to NTSC and NTSC to PAL conversion
- the video encoder supports Closed Captioning (CC) and MacroVision 7
- full screen On Screen Display (OSD) generator
- on-chip PLLs to generate all necessary clocks (as reference the 27 MHz video clock is used). This is only available from STi5508 cut 2.0 and above.

Input

Input data comes from the I^2S-bus. The front-end interface of this device, accepts DVD, CD and CD-DA information.

Signal Processing

For video, the input data stream is decoded to the appropriate MPEG, Sub Picture and OSD data streams, after which they are fed to the PAL/NTSC encoder. This cell will convert the digital MPEG/Sub Picture/OSD stream into a standard base band signal and into RGB components. It handles interlaced and non-interlaced data, can perform CC/TXT encoding and allows MacroVision copy protection.

For audio, the processing cell is a fully compatible Dolby AC-3, MPEG1, MPEG2, PCM, DTS and DVD-audio decoder, capable of decoding 5.1 and 2 channel streams.
Note: DTS and DVD-audio are only available with Sti5580.

Output

For video, six analogue output pins are available on which CVBS, S-VHS (Y/C) and RGB/YUV signals are present. They go directly to the A/V board.

For audio, the Sti5508 has 3 PCM digital outputs (for 6-channel analogue audio):

- PCM_OUT0: left + right (on pin 14 of connector 1603).
- PCM_OUT1: Centre and LFE (on pin 6 of connector 1604).
- PCM_OUT2: left and right surround (on pin 4 of connector 1604).

Sampling frequencies of 96 kHz, 48 kHz, 44.1 kHz and 32 kHz are supported, and a down sampling filter (96 kHz/48 kHz) is available.
The I^2S audio outputs of the Sti5508 go directly to the D/A converters (items 7500, 7502 and 7504) on the A/V board.

De-emphasis

In the 3rd generation player, the de-emphasis is done in the host processor (so not in the DACs on the A/V board). So there are no longer control lines foreseen to the A/V board. Therefore the 3rd generation mono board is not compatible with the first generation A/V board.

Memory

SDRAM

The size of the SDRAM is 2 times 16 Mb or 1 time 64 Mb (not simultaneously).
The SDRAM (items 7504 and 7505) has the following functions:

- it is used by the MPEG video decoder as a frame buffer
- it holds the software and the variables used by it.

Flash-ROM

A 2 Mb Flash-ROM (item 7401) holds the DVD firmware, and is controlled by pin 189 (FLASH_OEN) of the Sti5508/5580. It must be able to perform a download (by disk or DCU-link) in a Flash only system.

EEPROM

User settings, player settings and region code are stored in a 32 Kb I^2C EEPROM. For high-end applications a 64 Kb version is used, which is pin compatible.

9.5 Data Processing

9.5.1 Digital Theatre Sound (DTS) Board (If Present)

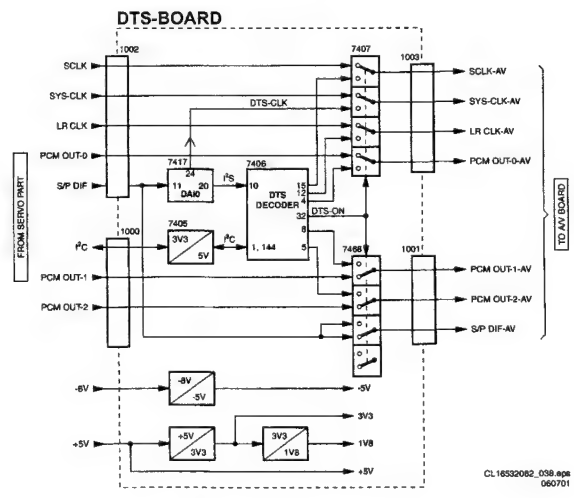

Figure 9-4

Some player models are DTS compatible. The DTS panel is then inserted between the Monoboard and the A/V board. You can split it up in three parts, which each are explained below.

Digital Video
The video data is not processed on this board, it goes directly to the A/V board.

Digital Audio Input Output (DAIO)
The AK4112A is a digital audio receiver (DIR) compatible with 96kHz, 24bits. It can automatically detect a Non-PCM bit stream. This IC decodes the SPDIF signal to an I^2S data stream. The output goes to the DTS decoder.

DTS Decoder
The DSP56366 (item 7406) is a Digital Signal Processor, used here as DTS decoder.
When the input data carries DTS information, the DTS_ON signal switches to high, and this will activate the two multiplex ICs 7407 and 7408. Now this data goes to the A/V board. In case it carries no DTS information, the PCM data from the Monoboard goes to the A/V board.
Output of the DTS decoder is an I^2S data stream, which is present at the Enhanced Serial Audio Interface (ESAI) pins.

9.5.2 Audio/Video (A/V) and SCART Board

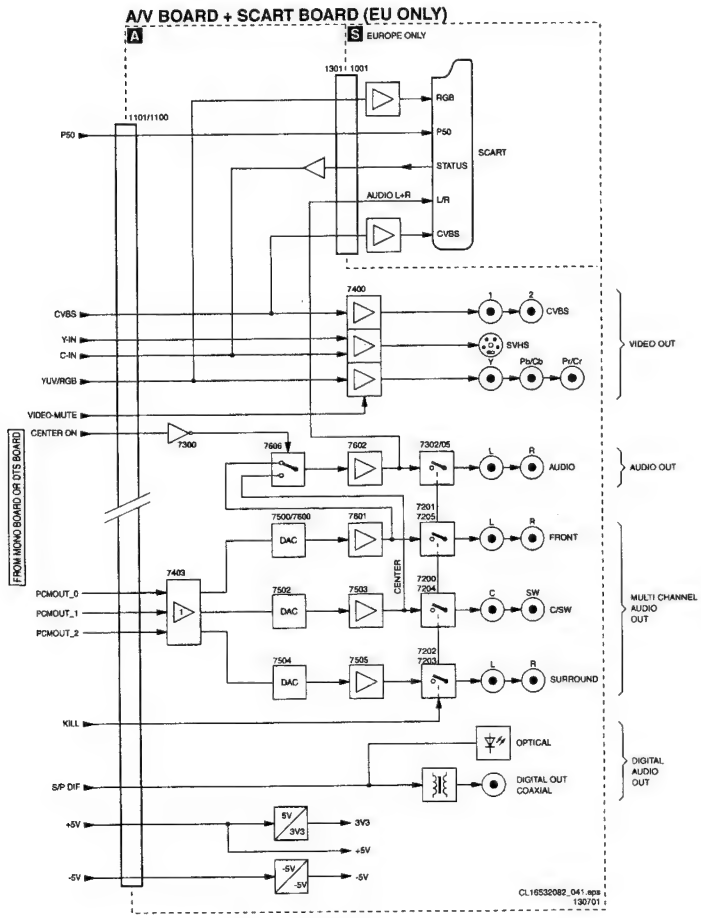

Figure 9-5

This board is the interface panel between the DVD-player and its peripherals.

Video
The analogue video signals from the Monoboard are fed to video buffer LA7109 (item 7400), and for Europe they also go to the SCART board (double SCART for DVD952). After amplification, they go directly to the VIDEO OUT cinch connectors.

Audio
The digital audio signals are fed to a buffer IC (7403, which is optional), followed by D/A converters.
The KILL signal, coming from the host processor Sti5508/ Sti5580, mutes the audio outputs during STOP, NEXT and PREVIOUS commands.

9.5.3 Progressive Scan Board (If Present)

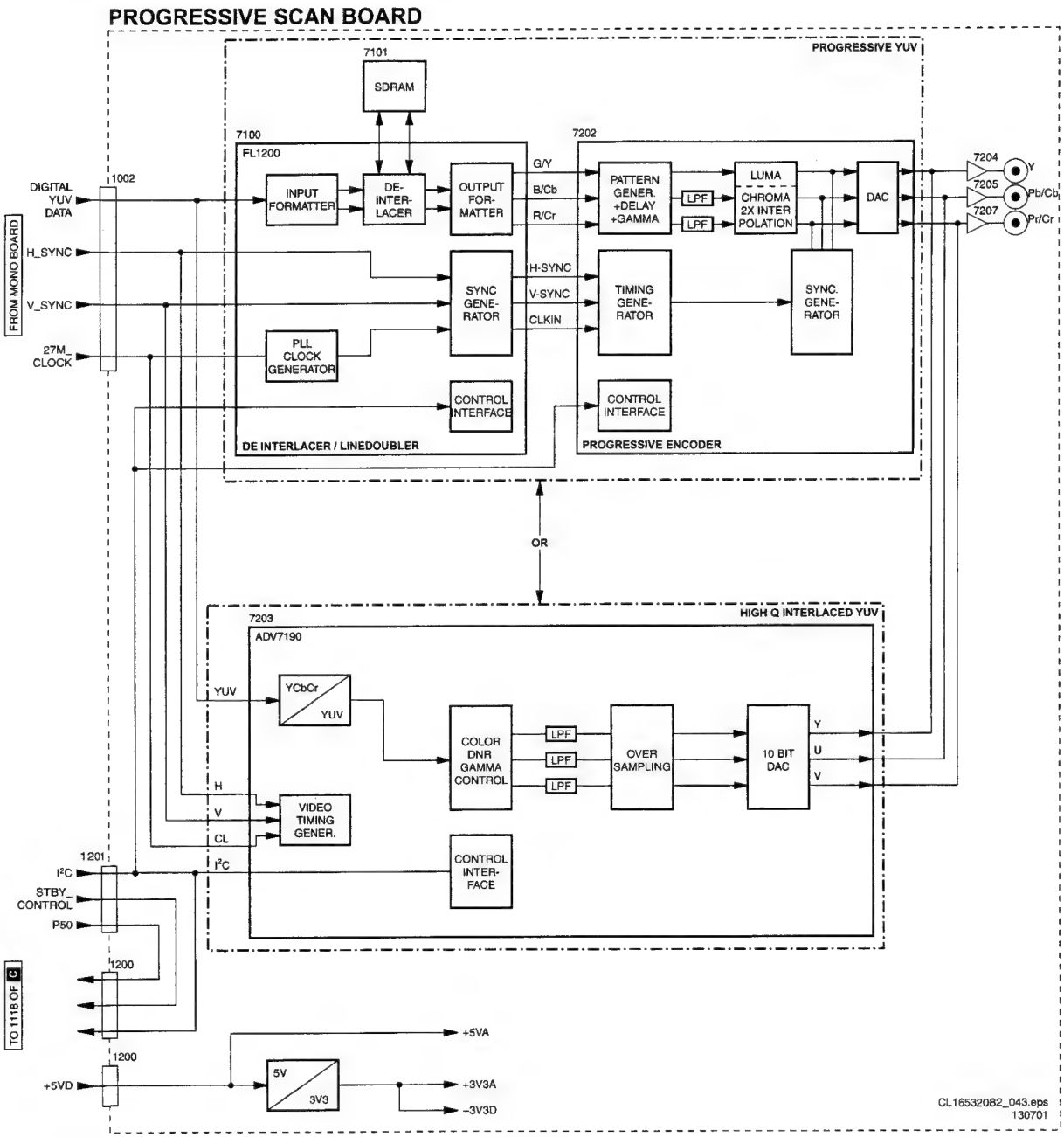

Figure 9-6

Some higher specified models offer progressive scan outputs. The Progressive Scan board consists of two separate circuits (not used together):

- Progressive YUV (for non-Europe versions).
- High Quality Interlaced YUV (for Europe).

Progressive YUV

This creates a picture signal with double the scan lines of a conventional interlaced picture, to create a noticeably sharper and smoother image. It offers higher picture resolution and eliminates virtually all motion artefacts. Even on large screens, the progressive scan lines are barely noticeable and it reduces picture flickering significant.

High Quality Interlaced YUV

This is still a conventional interlaced video, except that an integrated Digital Video Encoder (ADV7190) processes it. This IC encodes the eight bits digital YUV from the Monoboard, to output components YUV with improved picture quality (reduce low amplitude and high frequency noise, SNR ratio).

Both have the Digital Crystal Clear feature, which allow you to fine-tune the following parameters:

- Gamma correction,
- Chroma and Luma delay.

9.6 Control and Display Panel

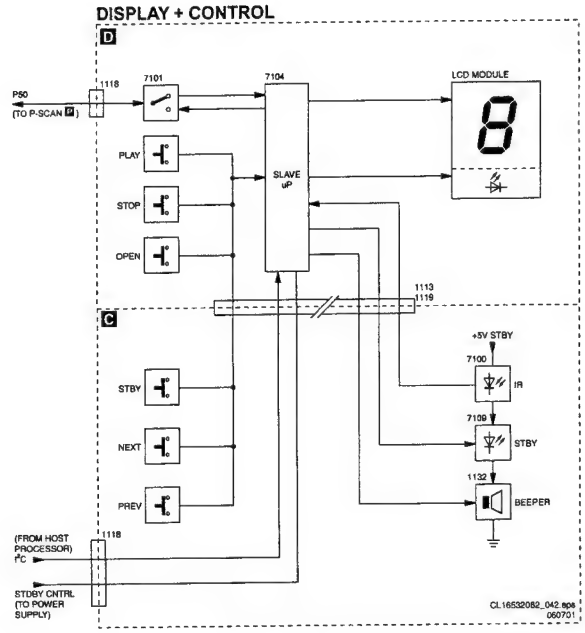

Figure 9-7

9.6.1 Control

Slave processor

The important component on this board is the (slave) microprocessor (item 7104). It works on an 8 MHz resonator (item 1110) and has a RESET circuit, which is triggered by the +5Vstby. After the RESET pulse, the STBY_CONTROL line will release the reset of the host microprocessor (on the Monoboard).

In addition, when going to Standby, the slave processor will reset the host processor. When the slave processor receives the correct IR (or key) code to leave the Standby mode, it resets the host processor.

Other slave processor functions are:

- generation of a scanning grid for the keys,
- generation of the display grid and segment scanning,
- generation of square signal to generate the filament voltage for FTD displays (when used),
- inputs for RC5/6 and P50 (P50 controller is build in).

Standby LED

Transistor 7109 drives the Standby LED. When the STB_LED signal from the slave processor is 'high', the LED is 'off'.

Key Matrix

When a key on the local keyboard is pressed, the signal at the scanning pins of the microprocessor goes from +5 V to 0 V.

Jog Shuttle(if present)

Some models (e.g. DVD952) are equipped with a jog-shuttle (via connector 1114). This jog shuttle functions just like a tact switch and is read via I/O port 4 of the slave processor.

IR Receiver

The IR controller in the slave processor handles both RC5 and RC6 signals. The logic is +5 V for 'high' and 0 V for 'low'.

P50 Interface

P50 (or Easylink) is a bi-directional serial interface for communication between video equipment. For European sets, this communication goes via pin 10 of the SCART connector, while for other regions (when present), this is a cinch connector. The slave processor controls the P50 bus.

9.6.2 Display

LCD Module (for Q-models)

The LCD module needs a supply voltage of +3 V, which is derived from the +5Vdigital signal via a 3 V zenerdiode (item 6101). The logic is +3.3 V for 'high' and 0 V for 'low'. All the logic and supply lines go via connector 1114.

The backlight LED for the LCD module needs a supply voltage of +3.5 V (via connector 1112). Transistor 7107 drives the LED, while resistors 3103 and 3105 are used as voltage dropping components.

FTD Display (for other models)

Some models (e.g. DVD952) have an FTD instead of an LCD. The slave processor has an internal square signal generator (42 kHz), to generate the AC filament voltage. TS7105 and 7106 amplify the square signal before it is applied to the display. The necessary power supply of -26 V is derived from the -40 V signal via voltage regulator 7112.

9.7 Abbreviation list

ADC	Analogue to Digital Converter
AM	Amplitude Modulation
AP	Asia Pacific
AV	External Audio Video
BE	Basic Engine
B/G	Monochrome TV system. Sound carrier distance is 5.5MHz
BC_AUX	Blue/Chroma input from AUX SCART
BC_TV	Blue/Chroma output to TV SCART
BTSC	Broadcast Television Standard Committee. Multiplex FM stereo sound system, originating from the USA and used e.g. in LATAM and AP-NTSC countries
ComPair	Computer aided rePair
CD-DA	CD Digital Audio
CS	Chip Select
CVBS	Composite Video Blanking and Synchronisation
DAC	Digital to Analogue Converter
DAIO	Digital Audio Input Output
D/K	Monochrome TV system. Sound carrier distance is 6.5MHz
DFU	Direction For Use: description for the end user
DNR	Dynamic Noise Reduction
DRAM	Dynamic RAM
DSP	Digital Signal Processing
DTS	Digital Theatre Sound
DVD	Digital Versatile Disc
EEPROM	Electrically Erasable and Programmable Read Only Memory
EFM	Eight to Fourteen bit Modulation
EU	Europe
EXT	External (source), entering the set via SCART or Cinch
FBIN_AUX	Fast blanking input from AUX SCART
FBOUT_TV	Fast blanking output to TV SCART
FLASH	Flash memory
FM	Frequency Modulation
GIN_AUX	Green input from AUX SCART
GOUT_TV	Green output to TV SCART
HP	Headphone
I	Monochrome TV system. Sound carrier distance is 6.0MHz

I2C	Integrated IC bus
I2S	Integrated IC Sound bus
IF	Intermediate Frequency
Interlaced	Scan mode where two fields are used to form one frame. Each field contains half the number of the total amount of lines. The fields are written in "pairs", causing line flicker.
IR	Infra Red
IRQ	Interrupt Request
LATAM	Latin America
LED	Light Emitting Diode
L/L'	Monochrome TV system. Sound carrier distance is 6.5 MHz. L' is Band I, L is all bands except for Band I
LIN_AUX	Audio input (left) from AUX SCART
LIN_TV	Audio input (left) from TV SCART
LOUT_AUX	Audio output (left) to AUX SCART
LOUT_TV	Audio ouput (left) to TV SCART
LPCM	Linear PCM
LRCLK	Left/Right clock
LS	Loudspeaker
M/N	Monochrome TV system. Sound carrier distance is 4.5 MHz
MACE	Mini All Compact Disc Engine
MPEG	Motion Pictures Experts Group
NC	Not Connected
NICAM	Near Instantaneous Compounded Audio Multiplexing. This is a digital sound system, mainly used in Europe.
NTSC	National Television Standard Committee. Colour system mainly used in North America and Japan. Colour carrier NTSC M/N = 3.579545 MHz, NTSC 4.43 = 4.433619 MHz (this is a VCR norm, it is not transmitted off-air)
NVM	Non Volatile Memory: IC containing TV related data e.g. alignments
OC	Open Circuit
OPU	Optical Pick up Unit
OSD	On Screen Display
P50	Project 50 or Easy Link
PAL	Phase Alternating Line. Colour system mainly used in West Europe (colour carrier = 4.433619 MHz) and South America (colour carrier PAL M = 3.575612 MHz and PAL N = 3.582056 MHz)
PCB	Printed Circuit Board
PCM	Pulse Code Modulation
PCM_CLK	Audio system clock for DAC
PCM_OUTx	Audio serial output data
PIP	Picture In Picture
PLL	Phase Locked Loop. Used for e.g. FST tuning systems. The customer can give directly the desired frequency
Progressive Scan	Scan mode where all scan lines are displayed in one frame at the same time, creating a double vertical resolution.
RAM	Random Access Memory
RC	Remote Control handset
RC5	Remote Control system 5, signal from the remote control receiver
RGB	Red Green Blue
RIN_AUX	Red input from AUX SCART
ROUT_TV	Red output to TV SCART
ROM	Read Only Memory
S2B	Serial to Basic, communication bus between host- and servo processor
SAP	Second Audio Program
SCART	Syndicat des Constructeurs d'Appareils Radiorecepteurs et Televisieurs
SCL	Serial Clock I2C
SCLK	Audio serial bit clock
SDA	Serial Data I2C
SDRAM	Synchronous DRAM
SECAM	SEequence Couleur Avec Memoire. Colour system mainly used in France and East Europe. Colour carriers = 4.406250 MHz and 4.250000 MHz
SLB_AUX	Slow blanking control signal from AUX SCART
SLB_TV	Slow blanking control signal to TV SCART
S/PDIF	Sony Philips Digital InterFace
SRAM	Static RAM
STBY	Standby
SVHS	Super Video Home System
SW	Software
THD	Total Harmonic Distortion
TXT	Teletext
µP	Microprocessor
VCD	Video CD
VCR	Video Cassette Recorder
Y/C	Luminance (Y) and Chrominance (C) signal
YUV	Component video
0/6/12	SCART switch control signal on A/V board. 0 = loop through (AUX to TV), 6 = play 16:9 format, 12 = play 4:3 format

10. Spare Parts List

Q40 /0X1 Mech.

Various

0001	3139 247 54182	FRONT COMPLETE Q40 EUR
0002	3139 247 51831	BADGE PHILIPS ASSY SILVER
0005	3139 247 54001	FRONT PLA Q40 EUR PNT PRT
0020	3139 247 53761	WINDOW Q40 US PNT PRT
0030	3139 247 54021	BUTTON L Q40 EUR PNT PRT
0035	3139 247 54031	BUTTON R Q40 EUR PNT PRT
0055	3139 247 54291	ASSY TRAY COVER DVD Q40
0250	3139 247 54041	PLATE BACK Q40 EUR PNT PRT
0300	3139 247 54081	COVER TOP Q40 EUR PNT PRT
0350	3139 228 87712	PROD.ASSY RC19237002/01 PACKED
0360▲	2422 070 98133	MAINSCORD EUR 1M5 BK B
0360▲	4822 321 10713	MAINSCORD 300V EUR 1M5 BK B (FOR /051 ONLY)
0365	3103 308 92610	CABLE AUDIO 2X2RCA MALE 1.5MTR
0366	4822 321 61579	VIDEO-CABLE
0372	3111 170 21992	SCART CABLE (L=1.10M) BMS
0375	3139 246 11251	IFU DVD Q40/05X
0375	3139 246 11221	IFU DVD Q40/001 /021
1101	3104 157 11200	CWAS FLEX DVD 16 130 32S
1102	3104 157 11190	CWAS FLEX DVD 22 130 32S
1108	3139 110 35821	FFC 08P/209/08P BD 1MMP FOLDED
1111	3104 157 11200	CWAS FLEX DVD 16 130 32S
1112	3104 157 11190	CWAS FLEX DVD 22 130 32S
1113	3104 157 11190	CWAS FLEX DVD 22 130 32S
1117	3139 110 35831	FFC 08P/241/08P BD 1MMP FOLDED

AV PWB DVDQ40 /0X1

Various

1100	2422 025 16525	CON BM V 16P F 1.00 FFC 0.3 R
1101	4822 265 11154	52030-2210 (22P)
1301	4822 265 11154	52030-2210 (22P)
1400	2422 026 05088	CON BM CINCH H 6P F B
1401	2422 026 05189	CON BM CINCH H 4P F YEWHRD B
1402	2422 026 05188	CON BM MDIN H 3P F TCS7927 B
1403	2422 026 05191	CON BM CINCH H 3P F RDBUGN B
1404	4822 267 31626	

⊣⊢

2100	4822 126 14305	100nF 10% 16V 0603
2101	4822 124 40184	1000µF 20% 10V
2102	4822 126 14305	100nF 10% 16V 0603
2103	4822 124 40184	1000µF 20% 10V
2104	4822 124 40207	100µF 20% 25V
2105	4822 126 14305	100nF 10% 16V 0603
2106	4822 124 40207	100µF 20% 25V
2107	3198 017 44740	0603 10V 470nF COL
2109	4822 124 40207	100µF 20% 25V
2110	4822 126 14305	100nF 10% 16V 0603
2111	4822 124 23052	100µF 20% 16V
2113	4822 126 13883	220pF 5% 50V
2114	4822 126 13883	220pF 5% 50V
2115	4822 126 13883	220pF 5% 50V
2116	4822 126 13883	220pF 5% 50V
2117	4822 124 23052	100µF 20% 16V
2118	4822 124 21732	10µF 20% 25V
2119	3198 017 44740	0603 10V 470nF COL
2120	4822 126 14305	100nF 10% 16V 0603
2121	4822 124 11947	10µF 20% 16V
2122	4822 122 33777	47pF 5% 63V
2123	4822 126 14305	100nF 10% 16V 0603
2124	4822 122 33777	47pF 5% 63V
2125	4822 126 13883	220pF 5% 50V
2126	4822 126 13883	220pF 5% 50V
2127	4822 126 13883	220pF 5% 50V
2130	4822 124 41584	100µF 20% 10V
2202	4822 124 80231	47µF 20% 16V
2203	4822 124 80231	47µF 20% 16V
2204	4822 124 80231	47µF 20% 16V
2209	4822 124 11947	10µF 20% 16V
2210	4822 124 11947	10µF 20% 16V
2211	4822 124 11947	10µF 20% 16V
2212	4822 124 11947	10µF 20% 16V
2213	4822 124 11947	10µF 20% 16V
2214	4822 124 11947	10µF 20% 16V
2215	4822 126 14305	100nF 10% 16V 0603
2216	4822 126 14305	100nF 10% 16V 0603
2217	4822 126 14305	100nF 10% 16V 0603
2218	4822 126 14305	100nF 10% 16V 0603
2219	4822 126 14305	100nF 10% 16V 0603
2220	4822 126 14305	100nF 10% 16V 0603
2221	4822 126 14305	100nF 10% 16V 0603
2222	4822 126 14305	100nF 10% 16V 0603
2223	4822 126 14305	100nF 10% 16V 0603
2224	4822 122 31765	100pF 2% 63V
2225	4822 122 31765	100pF 2% 63V
2227	4822 122 31765	100pF 2% 63V
2228	4822 122 31765	100pF 2% 63V
2230	4822 126 14305	100nF 10% 16V 0603
2231	4822 126 14305	100nF 10% 16V 0603
2234	4822 126 14305	100nF 10% 16V 0603
2235	4822 126 14305	100nF 10% 16V 0603
2238	4822 124 40207	100µF 20% 25V
2239	4822 124 40207	100µF 20% 25V
2240	4822 124 40207	100µF 20% 25V
2242	4822 124 40207	100µF 20% 25V
2243	3198 016 31020	0603 25V 1nF
2245	3198 016 31020	0603 25V 1nF
2246	3198 016 31020	0603 25V 1nF
2247	3198 016 31020	0603 25V 1nF
2248	3198 016 31020	0603 25V 1nF
2249	3198 016 31020	0603 25V 1nF
2251	4822 122 33761	22pF 5% 50V
2308	4822 126 14305	100nF 10% 16V 0603
2311	4822 124 22339	100UE 16V
2312	4822 126 14305	100nF 10% 16V 0603
2314	4822 122 31765	100pF 2% 63V
2316	3198 016 31020	0603 25V 1nF
2321	4822 124 22339	100UE 16V
2324	4822 122 31765	100pF 2% 63V
2327	3198 016 31020	0603 25V 1nF
2328	4822 126 14305	100nF 10% 16V 0603
2329	4822 126 14305	100nF 10% 16V 0603
2330	4822 124 41584	100µF 20% 10V
2331	4822 124 41584	100µF 20% 10V
2335	4822 126 14305	100nF 10% 16V 0603
2336	4822 126 14305	100nF 10% 16V 0603
2337	4822 126 14305	100nF 10% 16V 0603
2338	4822 126 14305	100nF 10% 16V 0603

⊣□⊢

3100	4822 117 11152	4Ω7 5%
3101	4822 117 11152	4Ω7 5%
3102	4822 051 30759	75Ω 5% 0.062W
3103	4822 051 30759	75Ω 5% 0.062W
3104	4822 051 30759	75Ω 5% 0.062W
3105	4822 117 11152	4Ω7 5%
3106	4822 051 30759	75Ω 5% 0.062W
3108	4822 051 30759	75Ω 5% 0.062W
3109	4822 051 30223	22k 5% 0.062W
3110	4822 051 30222	2k2 5% 0.062W
3111	4822 117 12902	8k2 1% 0.063W 0603
3112	4822 051 30759	75Ω 5% 0.062W
3113	4822 051 30223	22k 5% 0.062W
3114	4822 051 30759	75Ω 5% 0.062W
3115	4822 051 30153	15k 5% 0.062W
3116	4822 051 30103	10k 5% 0.062W
3118	4822 117 11152	4Ω7 5%
3120	4822 051 30101	100Ω 5% 0.062W
3121	4822 051 30101	100Ω 5% 0.062W
3122	4822 051 30689	68Ω 5% 0.063W 0603 RC21 RST SM
3200	4822 051 30479	47Ω 5% 0.062W
3201	4822 051 30479	47Ω 5% 0.062W
3202	4822 051 30479	47Ω 5% 0.062W
3204	4822 117 12902	8k2 1% 0.063W 0603
3205	4822 117 12902	8k2 1% 0.063W 0603
3206	4822 051 30103	10k 5% 0.062W
3208	4822 051 30103	10k 5% 0.062W
3209	4822 051 30472	4k7 5% 0.062W
3210	4822 051 30472	4k7 5% 0.062W
3212	4822 051 30472	4k7 5% 0.062W
3213	4822 051 30472	4k7 5% 0.062W
3216	4822 051 30103	10k 5% 0.062W
3217	4822 117 12902	8k2 1% 0.063W 0603
3219	4822 051 30103	10k 5% 0.062W
3220	4822 051 30272	2k7 5% 0.062W
3221	4822 051 30272	2k7 5% 0.062W
3222	4822 051 30272	2k7 5% 0.062W
3223	4822 051 30471	470Ω 5% 0.062W
3224	4822 051 30471	470Ω 5% 0.062W
3225	4822 051 30471	470Ω 5% 0.062W
3226	4822 117 12902	8k2 1% 0.063W 0603
3227	4822 051 30471	470Ω 5% 0.062W
3228	4822 051 30471	470Ω 5% 0.062W
3229	4822 051 30471	470Ω 5% 0.062W
3230	4822 051 30272	2k7 5% 0.062W
3231	4822 051 30272	2k7 5% 0.062W
3232	4822 051 30272	2k7 5% 0.062W
3233	4822 051 30103	10k 5% 0.062W
3234	4822 051 30103	10k 5% 0.062W
3235	4822 051 30103	10k 5% 0.062W
3236	4822 051 30103	10k 5% 0.062W
3237	4822 051 30103	10k 5% 0.062W
3238	4822 051 30103	10k 5% 0.062W
3301	4822 051 30008	0Ω jumper
3302	4822 051 30471	470Ω 5% 0.062W
3303	4822 117 13632	100k 1% 0603 0.62W
3304	4822 051 30272	2k7 5% 0.062W
3309	4822 051 30008	0Ω jumper
3311	4822 117 12902	8k2 1% 0.063W 0603
3314	4822 051 30103	10k 5% 0.062W
3319	4822 051 30008	0Ω jumper
3321	4822 051 30471	470Ω 5% 0.062W
3322	4822 117 13632	100k 1% 0603 0.62W
3323	4822 051 30272	2k7 5% 0.062W
3325	4822 051 30008	0Ω jumper
3328	4822 117 12902	8k2 1% 0.063W 0603
3331	4822 051 30103	10k 5% 0.062W
3334	4822 051 30472	4k7 5% 0.062W
3335	4822 051 30272	2k7 5% 0.062W
3336	4822 051 30472	4k7 5% 0.062W
3337	4822 051 30472	4k7 5% 0.062W

⌒

5103	4822 157 70601	100µH (9209270085A)

⊣◁ B

7101	4822 130 60511	BC847B
7102	4822 130 60511	BC847B
7103	4822 130 60511	BC847B
7200	4822 130 42804	BC817-25
7201	4822 130 42804	BC817-25
7202	4822 130 42804	BC817-25
7203	4822 130 42804	BC817-25
7204	4822 130 42804	BC817-25
7205	4822 130 42804	BC817-25
7300	4822 130 60511	BC847B
7302	4822 130 42804	BC817-25
7305	4822 130 42804	BC817-25
7400	9322 165 60668	IC SM LA7109 (TSAJ) R
7401	4822 209 16978	LF33CV
7402	4822 130 10845	GP1F32T
7500	9352 640 74118	IC SM UDA1334TS/N1 (PHSE) R
7502	9352 640 74118	IC SM UDA1334TS/N1 (PHSE) R
7503	4822 209 30095	LM833D
7504	9352 640 74118	IC SM UDA1334TS/N1 (PHSE) R
7505	4822 209 30095	LM833D
7601	4822 209 30095	LM833D
7602	4822 209 30095	LM833D
7605	4822 209 30095	LM833D
7606	5322 209 14481	HEF4053BT

Front PWB DVDQ40-50 /0X1

Various

1100	4822 276 13775	SWITCH
1101	4822 276 13775	SWITCH
1102	4822 276 13775	SWITCH
1103	4822 276 13775	SWITCH
1104	4822 276 13775	SWITCH
1105	3139 248 70791	LCD MODULE WD-G0504V-7WLWA WTK
1110	2422 540 98518	RES CER 8MHz CSTS*MHz 03 A
1111	4822 276 13775	SWITCH
1113	2422 025 16393	CON BM V 8P F 1.00 FFC 0.3 B
1114	2422 025 16393	CON BM V 8P F 1.00 FFC 0.3 B
1115	4822 267 10565	4P
1116	2422 025 16393	CON BM V 8P F 1.00 FFC 0.3 B
1117	2422 025 16393	CON BM V 8P F 1.00 FFC 0.3 B
1118	2422 025 08149	CON BM V 6P M 2.00 PH B (FOR DVDQ50 ONLY)
1118	4822 267 10637	B5B-PH-K (5P)
1119	2422 025 16393	CON BM V 8P F 1.00 FFC 0.3 B
1132	2422 527 01005	BUZZER PIEZO PKM13EPY-4002 Y

⊣⊢

2100	4822 126 13883	220pF 5% 50V
2101	4822 126 13883	220pF 5% 50V
2102	4822 124 40769	4.7µF 20% 100V
2104	4822 124 23052	100µF 20% 16V
2105	4822 126 14549	33nF 16V O6O3
2106	4822 124 23052	100µF 20% 16V
2114	4822 122 33761	22pF 5% 50V
2115	4822 122 33761	22pF 5% 50V
2128	5322 126 11578	1nF 10% 50V 0603
2129	4822 124 11947	10µF 20% 16V
2201	4822 126 14549	33nF 16V O6O3
2202	4822 126 14549	33nF 16V O6O3
2203	5322 126 11578	1nF 10% 50V 0603

⊣□⊢

3100	4822 051 30223	22k 5% 0.062W
3101	4822 051 30273	27k 5% 0.062W
3102	4822 117 12925	47k 1% 0.063W 0603
3103	4822 051 30109	10Ω 5% 0.062W
3104	4822 117 13632	100k 1% 0603 0.62W
3105	4822 051 30109	10Ω 5% 0.062W
3106	4822 051 30221	220Ω 5% 0.062W
3109	4822 051 30472	4k7 5% 0.062W
3110	4822 051 30472	4k7 5% 0.062W
3112	4822 051 30472	4k7 5% 0.062W
3113	4822 051 30472	4k7 5% 0.062W
3114	4822 051 30472	4k7 5% 0.062W
3115	4822 051 30472	4k7 5% 0.062W
3116	4822 051 30472	4k7 5% 0.062W
3121	4822 051 30472	4k7 5% 0.062W
3122	4822 051 30109	10Ω 5% 0.062W
3125	4822 051 30109	10Ω 5% 0.062W
3130	4822 051 30109	10Ω 5% 0.062W
3133	4822 051 30109	10Ω 5% 0.062W
3135	4822 051 30331	330Ω 5% 0.062W
3136	4822 051 30102	1k 5% 0.062W
3137	4822 051 30103	10k 5% 0.062W
3140	4822 051 30103	10k 5% 0.062W
3141	4822 051 30103	10k 5% 0.062W
3142	4822 051 30331	330Ω 5% 0.062W
3144	4822 117 13632	100k 1% 0603 0.62W
3150	4822 051 30472	4k7 5% 0.062W
3151	4822 051 30472	4k7 5% 0.062W
3152	4822 051 30472	4k7 5% 0.062W
3160	4822 051 30332	3k3 5% 0.062W
3161	4822 051 30332	3k3 5% 0.062W
3162	4822 051 30332	3k3 5% 0.062W
3163	4822 051 30332	3k3 5% 0.062W
3164	4822 051 30332	3k3 5% 0.062W
3170	4822 051 30103	10k 5% 0.062W
3171	4822 051 30103	10k 5% 0.062W
3174	4822 051 30472	4k7 5% 0.062W
3175	4822 051 30181	180Ω 5% 0.062W
3177	4822 051 30472	4k7 5% 0.062W

⊣▷⊢

6100	4822 130 11397	BAS316
6101	9340 385 50115	DIO REG SM BZX284-C3V0 (PHSE)R
6104	4822 130 11397	BAS316
6200	9322 171 67682	LED VS LTL-2R7TWK (LITO) B

7100	9322 155 22667	
7101	4822 130 60511	BC847B
7102	4822 130 60511	BC847B
7104	3139 240 50161	IC SM TMP87CM48DF 3ER6
7107	5322 130 60845	BC807-25
7108	4822 130 60511	BC847B
7109	4822 130 60373	BC856B
7110	4822 130 42804	BC817-25

DTS PWB DVDQ40-50 /0X1

Various

1000	2422 025 16525	CON BM V 16P F 1.00 FFC 0.3 R
1001	2422 025 16525	CON BM V 16P F 1.00 FFC 0.3 R
1002	4822 265 11154	52030-2210 (22P)
1003	4822 265 11154	52030-2210 (22P)
1012	2422 543 01207	12MHz 2880 20P AT-49 A

⊣⊢

2003	4822 124 40207	100µF 20% 25V
2030	4822 126 14549	33nF 16V O6O3
2031	3198 017 34730	0603 16V 47nF COL
2032	4822 124 40207	100µF 20% 25V
2033	4822 124 40207	100µF 20% 25V
2034	4822 126 14305	100nF 10% 16V 0603
2035	3198 016 31020	0603 25V 1nF
2036	4822 124 81286	47µF 20% 16V
2037	4822 126 14305	100nF 10% 16V 0603
2038	4822 126 14305	100nF 10% 16V 0603
2039	4822 126 14305	100nF 10% 16V 0603
2040	4822 126 14305	100nF 10% 16V 0603
2042	4822 124 40433	47µF 20% 25V
2043	4822 126 14305	100nF 10% 16V 0603
2044	4822 126 14305	100nF 10% 16V 0603
2045	4822 126 14305	100nF 10% 16V 0603
2046	4822 126 14305	100nF 10% 16V 0603
2047	4822 126 14305	100nF 10% 16V 0603
2048	4822 126 14305	100nF 10% 16V 0603
2049	4822 126 14305	100nF 10% 16V 0603
2050	4822 126 14305	100nF 10% 16V 0603
2051	4822 126 14305	100nF 10% 16V 0603
2052	4822 126 14305	100nF 10% 16V 0603
2053	4822 126 14305	100nF 10% 16V 0603
2054	4822 126 14305	100nF 10% 16V 0603
2055	4822 126 14305	100nF 10% 16V 0603
2056	4822 126 14305	100nF 10% 16V 0603
2057	4822 126 14305	100nF 10% 16V 0603
2058	4822 126 14305	100nF 10% 16V 0603
2059	4822 124 11947	10µF 20% 16V
2060	4822 124 40433	47µF 20% 25V
2062	4822 126 14494	22nF 10% 25V 0603
2063	4822 126 14494	22nF 10% 25V 0603
2064	4822 122 33777	47pF 5% 63V
2065	4822 122 33777	47pF 5% 63V
2066	4822 122 33777	47pF 5% 63V
2067	4822 122 33777	47pF 5% 63V
2068	4822 122 33777	47pF 5% 63V
2069	4822 122 33777	47pF 5% 63V
2071	4822 122 33741	10pF 10% 50V
2072	4822 122 33741	10pF 10% 50V
2115	4822 126 14305	100nF 10% 16V 0603
2116	4822 124 11947	10µF 20% 16V
2118	4822 124 11947	10µF 20% 16V
2119	4822 126 14305	100nF 10% 16V 0603
2120	4822 126 14305	100nF 10% 16V 0603
2121	4822 124 11947	10µF 20% 16V
2122	4822 126 14507	18pF 5% 50V 0603
2124	5322 126 11583	10nF 10% 50V 0603

⊣□⊢

3072	4822 051 30103	10k 5% 0.062W
3073	4822 051 30103	10k 5% 0.062W
3074	4822 051 30103	10k 5% 0.062W
3075	4822 051 30103	10k 5% 0.062W
3076	4822 051 30103	10k 5% 0.062W
3077	4822 051 30103	10k 5% 0.062W
3078	4822 051 30103	10k 5% 0.062W
3079	4822 051 30103	10k 5% 0.062W
3080	4822 051 30103	10k 5% 0.062W
3081	4822 117 12925	47k 1% 0.063W 0603
3086	4822 051 30102	1k 5% 0.062W
3092	4822 051 30101	100Ω 5% 0.062W
3096	4822 051 30103	10k 5% 0.062W
3098	4822 051 30103	10k 5% 0.062W
3100	4822 117 12139	22Ω 5% 0.062W
3104	4822 051 30101	100Ω 5% 0.062W
3105	4822 051 30101	100Ω 5% 0.062W
3108	4822 051 30101	100Ω 5% 0.062W
3109	4822 051 30101	100Ω 5% 0.062W
3110	4822 051 30101	100Ω 5% 0.062W
3112	4822 051 30103	10k 5% 0.062W
3113	4822 051 30101	100Ω 5% 0.062W
3114	4822 051 30101	100Ω 5% 0.062W
3115	4822 051 30103	10k 5% 0.062W
3116	4822 051 30101	100Ω 5% 0.062W
3117	4822 051 30103	10k 5% 0.062W
3118	4822 051 30101	100Ω 5% 0.062W
3119	4822 051 30101	100Ω 5% 0.062W
3120	4822 117 12925	47k 1% 0.063W 0603
3145	4822 051 30101	100Ω 5% 0.062W
3146	4822 051 30101	100Ω 5% 0.062W
3147	4822 051 30101	100Ω 5% 0.062W
3150	4822 051 30101	100Ω 5% 0.062W
3151	4822 051 30101	100Ω 5% 0.062W
3152	4822 051 30101	100Ω 5% 0.062W
3154	4822 051 30101	100Ω 5% 0.062W
3155	4822 051 30101	100Ω 5% 0.062W
3156	4822 051 30101	100Ω 5% 0.062W
3157	4822 051 30101	100Ω 5% 0.062W
3174	4822 051 30102	1k 5% 0.062W
3176	4822 051 30102	1k 5% 0.062W
3177	4822 051 30101	100Ω 5% 0.062W
3178	4822 051 30183	18k 5% 0.062W
3179	4822 051 30101	100Ω 5% 0.062W
3180	4822 051 30101	100Ω 5% 0.062W
3182	4822 051 30102	1k 5% 0.062W
3183	4822 051 30101	100Ω 5% 0.062W
3187	4822 051 30105	1M 5% 0.062W
3188	4822 051 30103	10k 5% 0.062W
3189	4822 051 30101	100Ω 5% 0.062W
4xxx	4822 051 10008	0Ω 5% 0.25W (1206)
4xxx	4822 051 20008	0Ω 5% 0.25W (0805)

⌐⌐

5003	4822 157 71304	1µH

7406	9322 159 99671	XCD56366PV120
7407	9322 077 40668	MC74F157AD
7408	9322 077 40668	MC74F157AD
7409	4822 209 17398	LD1117DT33
7417	9322 159 98668	AK4112AVF
7418	9352 611 78118	74HC1GU04GW

Single SCART DVDQ40-50 /0X1

Various

1001	4822 265 11154	52030-2210 (22P)
1002	2422 025 12352	CON BM EURO H 21P F BK GRND-L

⊣⊢

2100	4822 124 40207	100µF 20% 25V
2101	4822 126 14305	100nF 10% 16V 0603
2102	4822 126 13883	220pF 5% 50V
2103	4822 126 13883	220pF 5% 50V
2104	4822 126 13883	220pF 5% 50V
2105	4822 122 31765	100pF 2% 63V
2106	4822 126 14305	100nF 10% 16V 0603
2107	4822 124 40207	100µF 20% 25V
2108	4822 126 14305	100nF 10% 16V 0603
2109	4822 124 40207	100µF 20% 25V
2110	4822 124 40207	100µF 20% 25V
2111	4822 126 14305	100nF 10% 16V 0603
2112	4822 126 13883	220pF 5% 50V
2113	4822 126 13883	220pF 5% 50V
2114	4822 126 13883	220pF 5% 50V
2115	4822 126 13883	220pF 5% 50V

2116	4822 126 13883	220pF 5% 50V
2117	4822 126 14305	100nF 10% 16V 0603

3100	4822 051 30272	2k7 5% 0.062W
3101	4822 051 30221	220Ω 5% 0.062W
3102	4822 116 83872	220Ω 5% 0.5W
3103	4822 051 30272	2k7 5% 0.062W
3104	4822 051 30759	75Ω 5% 0.062W
3105	4822 051 30759	75Ω 5% 0.062W
3106	4822 051 30759	75Ω 5% 0.062W
3107	4822 051 30759	75Ω 5% 0.062W
3108	4822 051 30759	75Ω 5% 0.062W
3109	4822 051 30223	22k 5% 0.062W
3110	4822 051 30221	220Ω 5% 0.062W
3111	4822 051 30102	1k 5% 0.062W
3112	4822 117 12925	47k 1% 0.063W 0603
3113	4822 117 12925	47k 1% 0.063W 0603
3114	4822 117 12925	47k 1% 0.063W 0603
3115	4822 051 30472	4k7 5% 0.062W

6100	9340 548 63115	DIO REG SM PDZ15B (PHSE) R
6101	9340 548 63115	DIO REG SM PDZ15B (PHSE) R
6102	9340 548 63115	DIO REG SM PDZ15B (PHSE) R
6103	9340 548 63115	DIO REG SM PDZ15B (PHSE) R
6104	9340 548 63115	DIO REG SM PDZ15B (PHSE) R
6105	9340 548 63115	DIO REG SM PDZ15B (PHSE) R
6106	9340 548 63115	DIO REG SM PDZ15B (PHSE) R

7100	9322 165 60668	IC SM LA7109 (TSAJ) R
7401	4822 130 60511	BC847B
7402	4822 130 60511	BC847B
7403	4822 130 60373	BC856B
7404	4822 130 60511	BC847B
7405	4822 130 60373	BC856B
7406	4822 130 60511	BC847B

PSU PWB DVDQ40-50 /0X1

Various

0102▲	2422 030 00304	SOC SUPP AC HOR MALE 9452 B
0120▲	4822 265 11253	FUSE HOLDER 2P
0205	2422 025 08333	CON BM V 12P M 2.50 EH B
0206	2422 025 11244	CON BM V 07P M 2.50 EH B
0208	4822 267 10565	4P
1120▲	4822 253 30383	19181 (2,5A)

2102	4822 124 81151	22µF 50V
2106▲	4822 121 10711	100nF 20% 275V
2107	5322 126 10511	1nF 5% 50V
2108	4822 126 13694	68pF 1% 63V
2113	5322 122 32654	63V 22nF PM10 R
2121	2222 151 90054	EL 151 400V S 100µF
2122	4822 121 70141	33nF 5% 400V
2127	4822 126 12263	220pF 10%) 1KV
2130▲	4822 126 13841	1nF 20% 250V
2131▲	4822 126 13841	1nF 20% 250V
2201	4822 126 14585	100nF 10% 50V
2211	4822 124 41545	220µF 20% 16V
2212	4822 126 14585	100nF 10% 50V
2219	2020 021 91493	470µF 20% 25V
2220	2020 021 91636	EL YXF 35V S 1000F PM20 B (FOR DVDQ50 ONLY)
2221	4822 124 41545	220µF 20% 16V
2223	4822 126 14585	100nF 10% 50V
2225	4822 124 81021	100µF 20% 16V
2230	2020 012 93728	EL YK 10V S 2200µF PM20 B
2231	4822 124 81021	100µF 20% 16V
2240	4822 124 41545	220µF 20% 16V
2241	4822 124 81021	100µF 20% 16V
2242	4822 126 14585	100nF 10% 50V
2250	4822 124 81151	22µF 50V
2260	4822 124 81147	470µF 20% YK 25V
2261	4822 126 14585	100nF 10% 50V
2263	4822 124 40207	100µF 20% 25V
2264	4822 126 14585	100nF 10% 50V
2299	5322 122 32654	63V 22nF PM10 R

3102	4822 116 52182	15Ω 5% 0.5W
3103	4822 117 11449	2k2 5% 0.1W 0805
3104	4822 051 20339	33Ω 5% 0.1W
3105	4822 116 52219	330Ω 5% 0.5W
3108	4822 051 20223	22k 5% 0.1W
3110	4822 051 20472	4k7 5% 0.1W
3112	4822 051 20223	22k 5% 0.1W
3113	4822 051 20332	3k3 5% 0.1W
3116▲	4822 052 10102	1k 5% 0.33W
3120▲	2122 550 00147	VDR DC 1M A/423V S MAX 775V B
3121	4822 117 12181	470Ω 20% 0.5W
3122	4822 117 13515	2Ω7 3W AC03 WW
3125	4822 051 20472	4k7 5% 0.1W
3126	4822 116 80676	1Ω5 5% 0.5W
3127	4822 116 80676	1Ω5 5% 0.5W
3128	4822 116 80176	1Ω 5% 0.5W
3130▲	4822 053 21106	10M 5% 0.5W
3201	4822 116 52226	560Ω 5% 0.5W
3202	4822 117 11142	2k4 1% 0.1W
3203	4822 051 20479	47Ω 5% 0.1W
3204	4822 117 11504	270Ω 1% 0.1W
3205	4822 117 11144	3k9 1% 0.1W
3206	5322 117 12487	1k RC12G 1% 0.125W
3207	4822 051 20391	390Ω 5% 0.1W
3208	4822 117 11503	220Ω 1% 0.1W
3209	4822 117 12955	2k7 1% 0.1W 0805
3220	4822 051 20102	1k 5% 0.1W
3231	4822 051 20102	1k 5% 0.1W
3242	4822 051 20472	4k7 5% 0.1W
3243	4822 117 10837	100k 1% 0.1W
3260	4822 051 20102	1k 5% 0.1W
3262	4822 117 10833	10k 1% 0.1W
3263	4822 117 11148	56k 1% 0.1W
3276	4822 117 10834	47k 1% 0.1W

5121▲	4822 157 53348	TER CHOKE ASSY CU15D3
5131▲	4822 146 10402	TRAFO CT395FANF/PVF
5210	2422 535 94638	IND FXD LHL08 S 6U8 PM20 A
5220	2422 535 94638	IND FXD LHL08 S 6U8 PM20 A
5230	2422 535 94638	IND FXD LHL08 S 6U8 PM20 A
5250	4822 157 11517	10µH 5% 2.3X3.4
5260	2422 535 94638	IND FXD LHL08 S 6U8 PM20 A

6102	4822 130 42488	BYD33D
6103	4822 130 30621	1N4148
6106	4822 130 83757	BAS216
6112	4822 130 31603	1N4006
6113	4822 130 31603	1N4006
6114	4822 130 31603	1N4006
6115	4822 130 31603	1N4006
6122	4822 130 34281	BZX79-B15
6123	4822 130 34281	BZX79-B15
6127	5322 130 34574	1N4004G
6128	5322 130 34574	1N4004G
6201	4822 130 10794	BZX284-C10
6202	4822 130 83757	BAS216
6221	4822 130 11596	BYW29EX-200
6230	9322 161 78682	DIO REC SB360L-7024 (GI00) B
6240	4822 130 42488	BYD33D
6250	4822 130 42606	BYD33J
6260	9340 559 53112	DIO REC BYW95C-24 (PHSE) B
6261	5322 130 34574	1N4004G

7101	9322 164 16682	IC TY72011P2 (ONSE) L
7102▲	9322 149 04682	OPT CP TCET1102(G) (VISH) L
7125	9322 157 37687	FET POW STP3NC60FP (ST00) L
7201	4822 209 81397	TL431CLPST
7221	9322 163 53685	FET POW SM IRLML2502 (INR0) R
7231	9322 163 53685	FET POW SM IRLML2502 (INR0) R
7240	4822 130 40855	BC337
7241	4822 130 60373	BC856B
7249	4822 209 11079	LM79M05CT (NATIONAL)
7263	4822 130 60511	BC847B

VAL6011 DVDQ40-50 /0X1

Various

0001	9305 023 61101	VAL6011/01

Q50 /0X1 MECH

Various

0001	3139 247 53591	FRONT COMPLETE Q50
0005	3139 247 53991	FRONT AL Q50 EUR PNT PRT
0010	3139 247 53671	FRONT PLA Q50 US PNT PRT
0020	3139 247 53681	WINDOW Q50 US PNT PRT
0030	3139 247 53711	BUTTON L Q50 US PNT PRT
0035	3139 247 53721	BUTTON R Q50 US PNT PRT
0055	3139 247 54281	ASSY TRAY COVER DVD870
0070	3139 244 01461	LIGHT GUIDE Q50
0250	3139 247 54071	PLATE BACK Q50 EUR PNT PRT
0300	3139 247 53731	COVER TOP Q50 US PNT PRT
0350	3139 228 87672	PROD.ASSY RC19237001/01 PACKED
0360▲	2422 070 98133	MAINSCORD EUR 1M5 BK B
0360▲	4822 321 10713	MAINSCORD 300V EUR 1M5 BK B (/051 ONLY)
0365	3103 308 92610	CABLE AUDIO 2X2RCA MALE 1.5MTR
0366	4822 321 61579	VIDEO-CABLE
0372	3111 170 21992	SCART CABLE (L=1.10M) BMS
0375	3139 246 11211	IFU DVD Q50/05X
0375	3139 246 11181	IFU DVD Q50/00X
1101	3104 157 11200	CWAS FLEX DVD 16 130 32S
1102	3104 157 11190	CWAS FLEX DVD 22 130 32S
1108	3139 110 35821	FFC 08P/209/08P BD 1MMP FOLDED
1111	3104 157 11200	CWAS FLEX DVD 16 130 32S
1112	3104 157 11190	CWAS FLEX DVD 22 130 32S
1113	3104 157 11190	CWAS FLEX DVD 22 130 32S
1114	3139 110 35811	FFC 22P/180/22P AD 1MMP FOLDED
1117	3139 110 35831	FFC 08P/241/08P BD 1MMP FOLDED

AV PWB DVDQ50 /001 /021 /051

Various

1100	2422 025 16525	CON BM V 16P F 1.00 FFC 0.3 R
1101	4822 265 11154	52030-2210 (22P)
1301	4822 265 11154	52030-2210 (22P)
1400	2422 026 05088	CON BM CONNECTOR 6P F B
1401	2422 026 05189	CON BM CONNECTOR 4P F YEWHRD B
1402	2422 026 05188	CON BM MOLEX IN H 3P F TCS7927 B
1404	4822 267 31626	

2100	4822 126 14305	100nF 10% 16V 0603
2101	4822 124 40184	1000µF 20% 10V
2102	4822 126 14305	100nF 10% 16V 0603

2103	4822 124 40207	100µF 20% 25V
2104	4822 124 40207	100µF 20% 25V
2105	4822 126 14305	100nF 10% 16V 0603
2106	4822 124 40207	100µF 20% 25V
2107	3198 017 44740	0603 10V 470nF COL
2109	4822 124 40207	100µF 20% 25V
2110	4822 126 14305	100nF 10% 16V 0603
2111	4822 124 40184	1000µF 20% 10V
2113	4822 126 13883	220pF 5% 50V
2114	4822 126 13883	220pF 5% 50V
2115	4822 126 13883	220pF 5% 50V
2116	4822 126 13883	220pF 5% 50V
2117	4822 124 23052	100µF 20% 16V
2118	4822 124 21732	10µF 20% 25V
2119	3198 017 44740	0603 10V 470nF COL
2120	4822 126 14305	100nF 10% 16V 0603
2121	4822 124 11947	10µF 20% 16V
2122	4822 122 33777	47pF 5% 63V
2123	4822 126 14305	100nF 10% 16V 0603
2124	4822 122 33777	47pF 5% 63V
2125	4822 126 13883	220pF 5% 50V
2126	4822 126 13883	220pF 5% 50V
2127	4822 126 13883	220pF 5% 50V
2130	4822 124 41584	100µF 20% 10V
2202	4822 124 80231	47µF 20% 16V
2204	4822 124 80231	47µF 20% 16V
2209	4822 124 11947	10µF 20% 16V
2210	4822 124 11947	10µF 20% 16V
2213	4822 124 11947	10µF 20% 16V
2214	4822 124 11947	10µF 20% 16V
2215	4822 126 14305	100nF 10% 16V 0603
2216	4822 126 14305	100nF 10% 16V 0603
2219	4822 126 14305	100nF 10% 16V 0603
2220	4822 126 14305	100nF 10% 16V 0603
2221	4822 126 14305	100nF 10% 16V 0603
2223	4822 126 14305	100nF 10% 16V 0603
2224	4822 122 31765	100pF 2% 63V
2225	4822 122 31765	100pF 2% 63V
2227	4822 122 31765	100pF 2% 63V
2228	4822 122 31765	100pF 2% 63V
2230	4822 126 14305	100nF 10% 16V 0603
2231	4822 126 14305	100nF 10% 16V 0603
2234	4822 126 14305	100nF 10% 16V 0603
2235	4822 126 14305	100nF 10% 16V 0603
2238	4822 124 40207	100µF 20% 25V
2239	4822 124 40207	100µF 20% 25V
2240	4822 124 40207	100µF 20% 25V
2242	4822 124 40207	100µF 20% 25V
2243	4822 126 13909	680pF 10% 50V
2245	4822 126 13909	680pF 10% 50V
2246	3198 016 31020	0603 25V 1nF
2247	3198 016 31020	0603 25V 1nF
2248	3198 016 31020	0603 25V 1nF
2249	3198 016 31020	0603 25V 1nF
2251	4822 122 33761	22pF 5% 50V
2306	4822 126 14305	100nF 10% 16V 0603
2307	4822 126 14305	100nF 10% 16V 0603
2308	4822 126 14305	100nF 10% 16V 0603
2309	3198 016 38210	0603 25V 820P COL
2310	4822 126 14241	0603 50V 330P COL R
2311	4822 124 22339	100UE 16V
2312	4822 126 14305	100nF 10% 16V 0603
2313	3198 016 38210	0603 25V 820P COL
2314	4822 126 14241	0603 50V 330P COL R
2316	4822 126 13909	680pF 10% 50V
2317	4822 126 14305	100nF 10% 16V 0603
2318	3198 016 38210	0603 25V 820P COL
2319	4822 126 14241	0603 50V 330P COL R
2320	4822 124 11947	10µF 20% 16V
2321	4822 124 22339	100UE 16V
2322	4822 124 11947	10µF 20% 16V
2323	3198 016 38210	0603 25V 820P COL
2324	4822 126 14241	0603 50V 330P COL R
2325	4822 124 11947	10µF 20% 16V
2327	4822 126 13909	680pF 10% 50V
2328	4822 126 14305	100nF 10% 16V 0603
2329	4822 126 14305	100nF 10% 16V 0603
2330	4822 124 41584	100µF 20% 10V
2331	4822 124 41584	100µF 20% 10V
2335	4822 126 14305	100nF 10% 16V 0603
2336	4822 126 14305	100nF 10% 16V 0603
2337	4822 126 14305	100nF 10% 16V 0603
2338	4822 126 14305	100nF 10% 16V 0603

3100	4822 117 11152	4Ω7 5%
3101	4822 117 11152	4Ω7 5%
3105	4822 117 11152	4Ω7 5%
3106	4822 051 30759	75Ω 5% 0.062W
3108	4822 051 30759	75Ω 5% 0.062W
3109	4822 051 30223	22k 5% 0.062W
3110	4822 051 30222	2k2 5% 0.062W
3111	4822 117 12902	8k2 1% 0.063W 0603
3112	4822 051 30759	75Ω 5% 0.062W
3113	4822 051 30223	22k 5% 0.062W
3114	4822 051 30759	75Ω 5% 0.062W
3115	4822 051 30153	15k 5% 0.062W
3116	4822 051 30103	10k 5% 0.062W
3118	4822 117 11152	4Ω7 5%
3120	4822 051 30101	100Ω 5% 0.062W
3121	4822 051 30101	100Ω 5% 0.062W
3122	4822 051 30689	68Ω 5% 0.063W 0603 RC21 RST SM
3200	4822 051 30479	47Ω 5% 0.062W
3201	4822 051 30479	47Ω 5% 0.062W
3204	4822 117 12902	8k2 1% 0.063W 0603
3205	4822 117 12902	8k2 1% 0.063W 0603
3206	4822 051 30103	10k 5% 0.062W
3208	4822 051 30103	10k 5% 0.062W
3209	4822 051 30472	4k7 5% 0.062W
3210	4822 051 30472	4k7 5% 0.062W
3212	4822 051 30472	4k7 5% 0.062W
3213	4822 051 30472	4k7 5% 0.062W
3216	4822 051 30103	10k 5% 0.062W
3217	4822 117 12902	8k2 1% 0.063W 0603
3219	4822 051 30103	10k 5% 0.062W
3220	4822 051 30272	2k7 5% 0.062W
3221	4822 051 30272	2k7 5% 0.062W
3222	4822 051 30272	2k7 5% 0.062W
3223	4822 051 30471	470Ω 5% 0.062W
3224	4822 051 30221	220Ω 5% 0.062W
3225	4822 051 30471	470Ω 5% 0.062W
3226	4822 117 12902	8k2 1% 0.063W 0603
3227	4822 051 30471	470Ω 5% 0.062W
3228	4822 051 30221	220Ω 5% 0.062W
3229	4822 051 30471	470Ω 5% 0.062W
3230	4822 051 30272	2k7 5% 0.062W
3231	4822 051 30272	2k7 5% 0.062W
3232	4822 051 30272	2k7 5% 0.062W
3233	4822 051 30103	10k 5% 0.062W
3234	4822 051 30103	10k 5% 0.062W
3235	4822 051 30103	10k 5% 0.062W
3236	4822 051 30103	10k 5% 0.062W
3237	4822 051 30103	10k 5% 0.062W
3238	4822 051 30103	10k 5% 0.062W
3300	4822 117 12903	1k8 1% 0.063W 0603
3301	2322 704 62002	RST SM 0603 RC22H 2k PM1 R
3302	4822 051 30471	470Ω 5% 0.062W
3303	2322 704 62002	RST SM 0603 RC22H 2k PM1 R
3304	4822 051 30272	2k7 5% 0.062W
3308	4822 117 12903	1k8 1% 0.063W 0603
3309	2322 704 62002	RST SM 0603 RC22H 2k PM1 R
3311	2322 704 62002	RST SM 0603 RC22H 2k PM1 R
3314	4822 051 30103	10k 5% 0.062W
3315	4822 051 30103	10k 5% 0.062W
3317	4822 051 30222	2k2 5% 0.062W
3318	4822 117 12903	1k8 1% 0.063W 0603
3319	2322 704 62002	RST SM 0603 RC22H 2k PM1 R
3320	4822 051 30562	5k6 5% 0.063W 0603 RC21 RST SM
3321	4822 051 30471	470Ω 5% 0.062W
3322	2322 704 62002	RST SM 0603 RC22H 2k PM1 R
3323	4822 051 30272	2k7 5% 0.062W
3324	4822 117 12903	1k8 1% 0.063W 0603
3325	2322 704 62002	RST SM 0603 RC22H 2k PM1 R
3327	4822 051 30472	4k7 5% 0.062W
3328	2322 704 62002	RST SM 0603 RC22H 2k PM1 R
3331	4822 051 30103	10k 5% 0.062W
3334	4822 051 30472	4k7 5% 0.062W
3335	4822 051 30272	2k7 5% 0.062W

5103	4822 157 70601	100µH (920927085A)

6300	4822 130 83649	1SS355

7101	4822 130 60511	BC847B
7102	4822 130 60511	BC847B
7103	4822 130 60511	BC847B
7200	4822 130 42804	BC817-25
7201	4822 130 42804	BC817-25
7202	4822 130 42804	BC817-25
7203	4822 130 42804	BC817-25
7204	4822 130 42804	BC817-25
7205	4822 130 42804	BC817-25
7300	4822 130 60511	BC847B
7302	4822 130 42804	BC817-25
7305	4822 130 42804	BC817-25
7400	9322 165 60668	IC SM LA7109 (TSAJ) R
7401	4822 209 16978	LF33CV
7402	4822 130 10845	GP1F32T
7502	9352 640 74118	IC SM UDA1334TS/NI (PHSE) R
7503	4822 209 30095	LM833D
7504	9352 640 74118	IC SM UDA1334TS/NI (PHSE) R
7505	4822 209 30095	LM833D
7600	9965 000 06290	AD1852 (DAC 24BIT/ 96KHZ)
7601	9322 067 00668	IC SM OP275GS (ANA0) R
7602	4822 209 30095	LM833D
7605	4822 209 30095	LM833D
7606	5322 209 14481	HEF4053BT

PROG SCAN PWB DVDQ50 /001 / 021 /051

Various

1002	2422 025 14349	CON BM H 22P F 1.00 FFC 0.3 R
1003	2422 026 05191	CON BM CINCH H 3P F RDBUGN B
1200	2422 025 08149	CON BM V 6P M 2.00 PH B
1201	4822 267 10637	B5B-PH-K (5P)

2200	4822 124 40184	1000µF 20% 10V
2201	4822 126 14305	100nF 10% 16V 0603
2203	4822 124 81286	47µF 20% 16V
2204	4822 126 14305	100nF 10% 16V 0603
2206	4822 124 40184	1000µF 20% 10V
2207	4822 124 81286	47µF 20% 16V
2208	4822 126 14305	100nF 10% 16V 0603
2209	4822 126 14305	100nF 10% 16V 0603
2210	4822 124 40769	4.7µF 20% 100V
2211	4822 126 14305	100nF 10% 16V 0603
2212	4822 126 14305	100nF 10% 16V 0603
2213	4822 126 11669	27pF
2214	4822 126 13956	68pF 5% 63V CASE 0603
2216	5322 126 11578	1nF 10% 50V 0603
2217	4822 126 14305	100nF 10% 16V 0603
2220	4822 126 11669	27pF
2221	4822 126 13956	68pF 5% 63V CASE 0603
2223	5322 126 11578	1nF 10% 50V 0603
2224	4822 126 14305	100nF 10% 16V 0603
2225	4822 126 11669	27pF
2226	4822 126 13956	68pF 5% 63V CASE 0603
2229	4822 122 31765	100pF 2% 63V
2230	4822 122 31765	100pF 2% 63V
2231	4822 122 31765	100pF 2% 63V
2233	4822 126 14305	100nF 10% 16V 0603
2234	4822 126 14305	100nF 10% 16V 0603
2235	4822 126 14305	100nF 10% 16V 0603
2236	4822 126 14305	100nF 10% 16V 0603
2237	4822 126 14305	100nF 10% 16V 0603
2238	4822 126 14305	100nF 10% 16V 0603
2239	4822 126 14305	100nF 10% 16V 0603
2243	3198 017 44740	0603 10V 470nF COL
2244	4822 126 14305	100nF 10% 16V 0603
2245	4822 126 14305	100nF 10% 16V 0603

3200	4822 051 30101	100Ω 5% 0.062W
3201	4822 051 30101	100Ω 5% 0.062W
3202	4822 051 30103	10k 5% 0.062W
3203	4822 051 30103	10k 5% 0.062W
3204	4822 051 30103	10k 5% 0.062W
3213	4822 117 11152	4Ω7 5%
3214	4822 051 20008	0Ω jumper . (0805)
3215	4822 051 30472	4k7 5% 0.062W
3229	4822 051 30759	75Ω 5% 0.062W
3230	4822 117 11817	1k2 1% 1/16W
3231	5322 117 13036	1k2 1% 0.063W 0603 RC22H
3232	5322 117 13036	1k2 1% 0.063W 0603 RC22H
3233	5322 117 13036	1k2 1% 0.063W 0603 RC22H

3234	5322 117 13036	1k2 1% 0.063W 0603 RC22H
3235	5322 117 13036	1k2 1% 0.063W 0603 RC22H
3236	5322 117 13036	1k2 1% 0.063W 0603 RC22H
3237	4822 051 30759	75Ω 5% 0.062W
3238	5322 117 13036	1k2 1% 0.063W 0603 RC22H
3239	5322 117 13036	1k2 1% 0.063W 0603 RC22H
3240	5322 117 13036	1k2 1% 0.063W 0603 RC22H
3241	5322 117 13036	1k2 1% 0.063W 0603 RC22H
3242	5322 117 13036	1k2 1% 0.063W 0603 RC22H
3243	5322 117 13036	1k2 1% 0.063W 0603 RC22H
3244	4822 117 11817	1k2 1% 1/16W
3246	4822 051 30759	75Ω 5% 0.062W
3247	5322 117 13036	1k2 1% 0.063W 0603 RC22H
3248	5322 117 13036	1k2 1% 0.063W 0603 RC22H
3249	5322 117 13036	1k2 1% 0.063W 0603 RC22H
3250	5322 117 13036	1k2 1% 0.063W 0603 RC22H
3251	5322 117 13036	1k2 1% 0.063W 0603 RC22H
3252	5322 117 13036	1k2 1% 0.063W 0603 RC22H
4xxx	4822 051 10008	0Ω 5% 0.25W (1206)
4xxx	4822 051 20008	0Ω 5% 0.25W (0805)

5202	4822 157 11828	22U 20% SM 0805
5203	4822 051 20008	0R00 JUMP. (0805)
5204	4822 157 71593	10µH 10%
5205	4822 157 11828	22U 20% SM 0805
5206	4822 051 20008	0R00 JUMP. (0805)
5207	4822 157 71593	10µH 10%
5208	4822 157 11828	22U 20% SM 0805
5209	4822 051 20008	0R00 JUMP. (0805)
5210	4822 157 71593	10µH 10%

7201	4822 209 17398	LD1117DT33
7203	9322 168 16671	IC SM ADV7190KST (ANA0) Y
7204	9322 167 49685	IC SM AD8061ART (ANA0) R
7205	9322 167 49685	IC SM AD8061ART (ANA0) R
7207	9322 167 49685	IC SM AD8061ART (ANA0) R